8558G/8560G系列

链式平缝机系列产品
Chainstitch lockstitch sewing machine

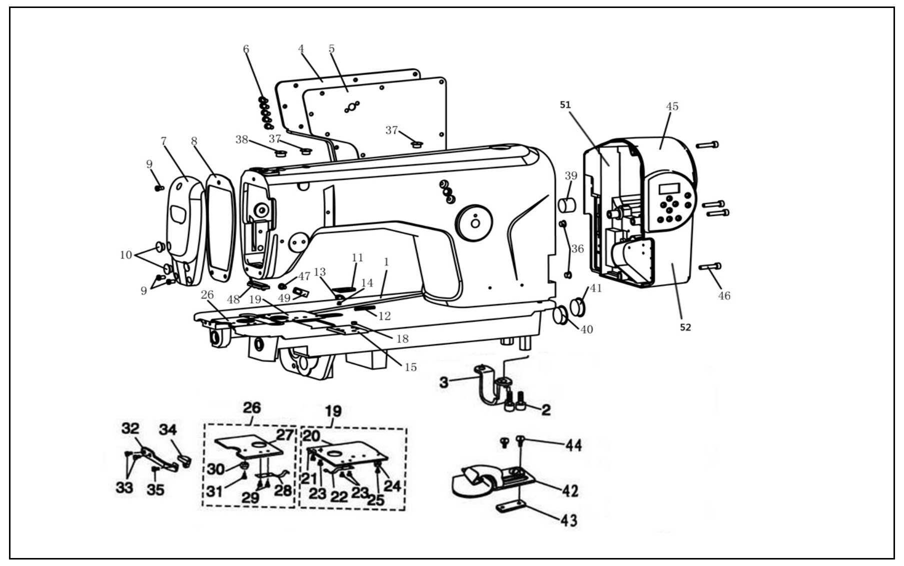

一、机壳分组件 Arm bed components

序号NO.	公司件号 Part NO.	名称 PartName	零件描述 Description	数量 Number
1	12500001	机壳部件	arm bed complete	1
2	116S13002	底板支承螺钉	bed screw stud	2
3	12512001	底板支承板	bed support	1
4	300972	后窗板	side plate	1
5	12522001	后窗板垫	gasket	1
6	101S11001	后窗板螺钉	side plate screw	9
7	300973	面板部件	face plate asm	1
8	12822001	面板垫	face plate gasket	1
9	101S11001	面板螺钉	screw	3
10	10122003	面板调节螺孔塞	rubber plug	2
11	12515001	凸轮盖压板	cam cover latch	1
12	12527001	凸轮盖压板弹簧	spring	1
13	12512002	凸轮盖压板弹簧座	spring suspension	1
14	125S11004	凸轮盖压板座螺钉	screw	1
15	12515002	附件安装板	attachment installing plate	1
18	125S15008	附件安装板螺钉	screw	1
19	1251500300	凸轮盖部件	came cover asm	1
20	12515008	凸轮盖(8558W:1/4″,1/8″3/16″,-2,-3)	came cover(8558W:1/4″,1/8″3/16″,-2,-3)	1
20	12515011	凸轮盖(8558W-3/8″,8560W-PL)	came cover(8558W-3/8″,8560W-PL)	1
20	12615001	凸轮盖(8560W-1/8″)	came cover(8560W-1/8″)	1
21	12512004	凸轮盖托板	came cover	1
22	12512005	凸轮盖弹簧	spring	1
23	101S11019	凸轮盖弹簧螺钉	screw	4
24	12515006	凸轮盖导轮	cam cover guide	1
25	201S11002	凸轮盖导轮螺钉	screw	1
26	1251500500	推板组件	bed slide asm	1
27	12615002	推板	bed slide	1
28	12512006	推板簧	spring	1
29	101S11019	推板簧螺钉	screw	2
30	12515006	推板导轮	bed slide guide	1
31	201S11002	推板导轮螺钉	screw	1
32	12512007	推板锁簧	bed slide lock spring	1
33	101S11004	推板锁簧螺钉	screw	2
34	12509001	推板簧把手	latcn	1
35	101S11027	推板簧把手螺钉	screw	1
36	12522006	轴套定位螺孔塞	rubber plug	2
37	40122016	上轴套油线孔塞	ruber plug	2
38	10122004	针杆曲柄螺孔塞	ruber plug	1
39	12522022	送料针距调节器孔塞	ruber plug	1
40	12522003	抬牙轴孔塞	ruber plug	1
41	12522004	下轴盲孔塞	ruber plug	1
42	1251201000	卷边器部件(1/4″)	folder	1
42	1251206200	卷边器部件(8558W-1/8″,8560W,8560W-PL)	folder(8558W-1/8″,8560W,8560W-PL)	1
42	1251206400	卷边器部件(3/8″)	folder(3/8″)	1
42	1251206300	卷边器部件(3/16″)	folder(3/16″)	1
43	12512013	卷边器垫块	gasket	1
44	125S11006	卷边器螺钉	screw	2
45	10133100	电控组件(JACK)	electronic control module	1
45	10133106	电控组件(BRC)	electronic control module	1
46	413S13012	电控螺钉	screw	4
47	101S11005	线钩螺钉	screw	3
48	40230011	LED灯	LED lamp	1
49	13612014	LED灯线夹	LED clamp	3
50	12512054	线夹	clamp	1
51	95100013	主板	circuit board	1
52	95111003	罩壳	cover	1

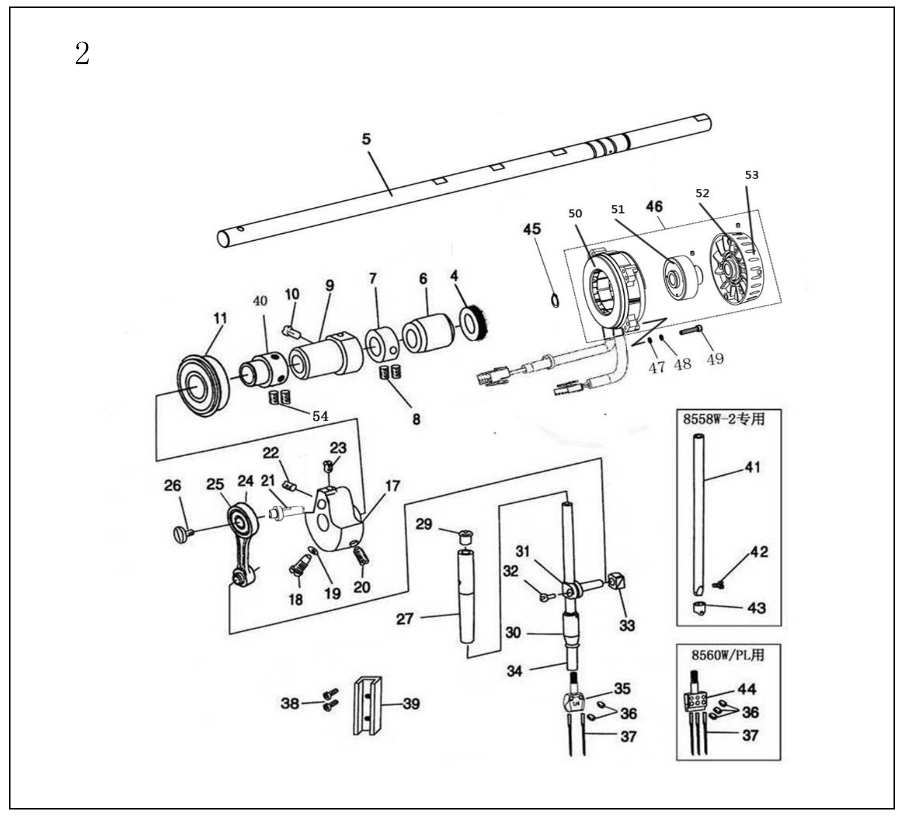

零件手册
Parts Manual

二、上轴针杆分组件 Main shaft & needle bar components

序号NO.	公司件号 Part NO.	名称 PartName	零件描述 Description	数量 Number
4	1252200900	上轴油封组件	main shaft oil seal asm	1
5	12502020	上轴	main shaft	1
5	12602006	上轴	main shaft	1
6	1250300500	上轴后轴套部件	main shaft bushing,rear	1
7	10108001	上轴挡圈	main shaft thrust collar	1
8	101S15007	上轴挡圈螺钉	screw	2
9	12503004	上轴中轴套	main shaft bushing,intermediate	1
10	101S15006	上轴中套螺钉	screw	1
11	B10003	轴承6004ZZN	bearing 6004zzn	1
13	10122012	上轴孔塞	Roller felt	1
14	12526026	曲柄油量调节销	Crank oil adjusting pin	1
15	12522024	曲柄油量调节销套	Rubber bushing	1
16	12522025	曲柄油量调节销O型圈	O-Rubber ring	1
17	12504001	针杆曲柄	counterweight asm	1
18	101S11003	针杆曲柄定位螺钉	screw	1
19	GR1472	定位螺钉O型圈	O-Rubber ring	1
20	101S15004	针杆曲柄紧固螺钉	screw	1
21	12626003	针杆连杆销	needle crank	1
22	101S15002	针杆连杆销紧固螺钉	screw	1
23	101S15002	针杆连杆销螺钉	screw	1
24	1250501000	针杆连杆组件	needle bar crank rod asm	1
25	B04008	针杆连杆轴承	needle roller bearing	1
26	101S17001	针杆连杆左旋螺钉	left twist screw	1
27	12503009	针杆上衬套	needle barbushing upper	1
29	10122013	针杆上衬套孔塞	rubber plug	1
30	10103023	针杆下衬套	needle bar bushing,lower	1
31	10138002	针杆连接柱	needle bar connection asm	1
32	101S11005	针杆连接柱螺钉	screw	1
33	10109001	针杆连接柱滑块	crank slide block	1
34	12602002	针杆	needle bar	1
35	12534001	针夹(1/4″)	needle clamp(1/4″)	1
35	12534002	针夹(1/8″)	needle clamp(1/8″)	1
35	12534004	针夹(3/8″)	needle clamp(3/8″)	1
35	12534003	针夹(3/16″)	needle clamp(3/16″)	1
35	12534006	针夹(8558W-3)	needle clamp(8558W-3)	1
36	125S15007	支针螺钉	screw	2
37	12617005	机针	needle	2
38	101S11008	滑块导轨螺钉	screw SM11/64*40 L=8	2
39	10109002	针杆连接柱滑块导轨	needle bag guide	1
40	1220300100	上轴轴承套	main shaft bearing bushing	1
41	11402035	针杆(8558W-2用)	needle bar	1
42	101S11006	支针螺钉	screw	1
43	10113002	针杆线勾	needle bar frame thread	1
44	12634002	针夹(1/8″)	needle clamp(1/8″)	1
44	12634004	针夹(PL)	needle clamp(PL)	1
45	H03001	卡簧	motor stator	1
46	10111067	电机组件	motor rotor	1
47	13628013	垫圈	washer	3
48	W03002	弹性垫圈	washer	3
49	114S13001	螺钉	screw	4
50	95200005	定子	stator components	1
51	95200010	转子	rotor components	1
52	95147001	磁钢	magnet	2
53	303560	手轮	puller	1
54	S10009	螺钉	screw	2

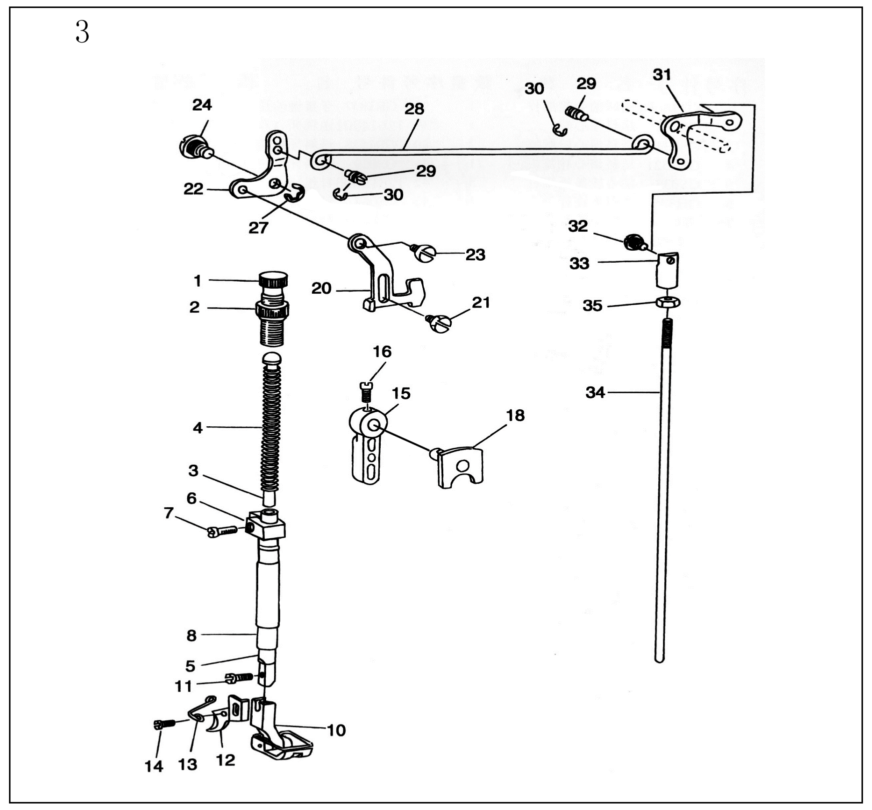

三、压料分组件 Presser bar components

序号NO.	公司件号 Part NO.	名称 PartName	零件描述 Description	数量 Number
1	10111034	调压螺钉	presser spring regulator	1
2	10111036	调压螺钉螺母	nut	1
3	10102003	调压导杆	presser bar guide bar	1
4	10127005	调压簧	presser spring	1
5	12502002	压杆	presser bar	1
6	12509002	压杆导架	presser guide bracket asm	1
7	116S11005	压杆导架螺钉	screw	1
8	10103012	压杆衬套	presser bar bushing,low	1
10	1251600100	压脚部件1/4″	presser foot asm 1/4″	1
10	1251600400	压脚部件1/8″	presser foot asm 1/8″	1
10	1251600500	压脚部件3/16″	presser foot asm 3/16″	1
10	1251600600	压脚部件3/8″	presser foot asm 3/8″	1
10	1251601000	压脚部件8558W-2	presser foot asm 8558W-2	1
10	1251601100	压脚部件8558W-3	presser foot asm 8558W-3	1
10	1261600800	压脚部件8560W-1/8″	presser foot asm 8560W-1/8″	1
10	1261601000	压脚部件8560W-PL	presser foot asm 8560W-PL	1
11	101S11009	压脚螺钉	screw	1
12	12519001	切线刀	thread knife	1
13	12527003	切线刀导钩	thread knife guide	1
14	201S11002	切线刀导钩螺钉	screw	1
15	1251100100	压脚扳手组件	hand lifter asm	1
16	101S11001	压脚扳手螺钉	screw	1
18	1251000100	压脚扳手凸轮部件	hand lifter cam asm	1
20	12512057	压脚升降板	lifting lever	1
21	125S20003	升降板轴位螺钉	hinge screw	1
22	12512014	抬压脚前杠杆	lifting link forlifting level	1
23	125S20001	前杠杆轴位螺钉	hinge screw	1
24	125S11001	前杠杆螺纹销	hinge pin	1
27	H05013	挡圈	snap ring	1
28	12512015	抬压脚拉杆	lifting lever connecting rod	1
29	125S11002	抬压脚拉杆螺钉	screw	2
30	H05003	抬压脚拉杆开口挡圈	snap ring	2
31	12512016	抬压脚后杠杆	lifting lever link rear	1
32	125S20004	后杠杆轴位螺钉	hinge screw	1
33	12526003	抬压脚顶杆接头	swivel	1
34	12512017	抬压脚顶杆	lifting lever connecting rod,vertical	1
35	116S16006	抬压脚顶杆螺母	nut	1

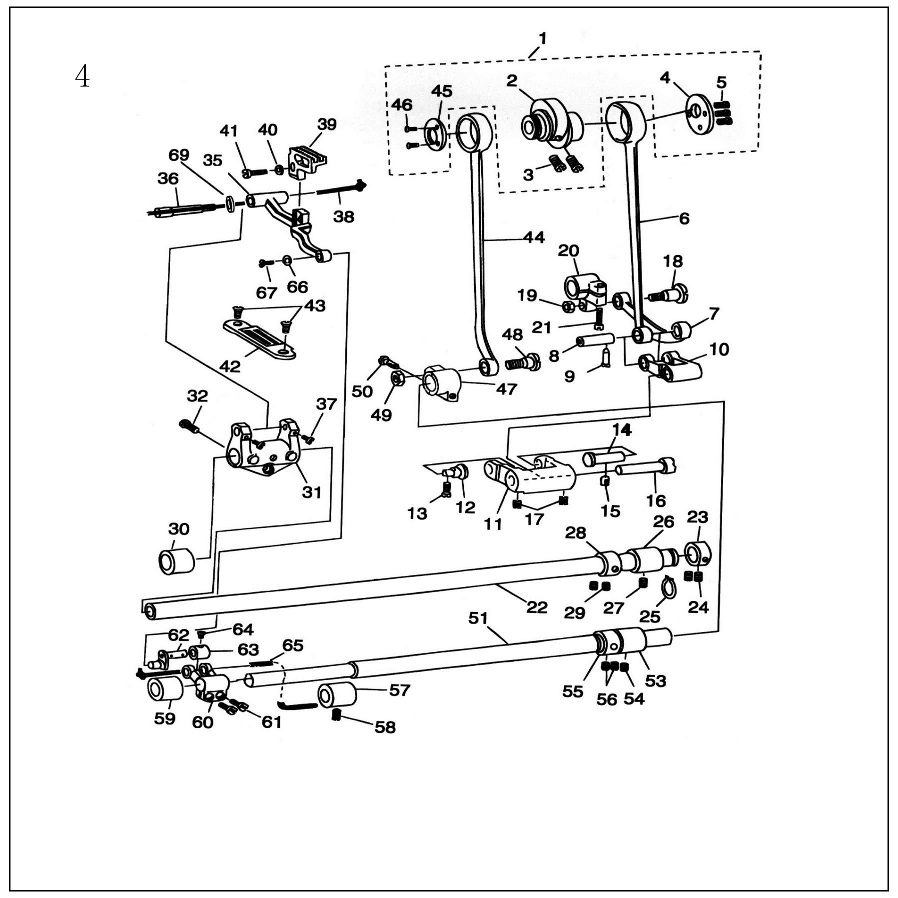

四、送料分组件 Feed mechanism components

序号NO.	公司件号 Part NO.	名称 PartName	零件描述 Description	数量 Number
1	1251000300	送料偏心轮部件	feed eccentric cam sam	1
2	12510004	送料偏心轮	feed eccentric cam sam	1
3	101S11013	送料偏心轮螺钉	screw	2
4	12512018	送料偏心轮盖板	feed eccentric cam thrust washer	1
5	125S17001	偏心轮盖板螺钉	screw	3
6	12505001	送料大连杆	feed rocker shaft connecting rod	1
7	12505002	送料小连杆	connecting rod	1
8	12526004	送料连杆销	connecting pin	1
9	125S11009	送料连杆销螺钉	screw	1
10	12504002	送料摆杆	feed driving rocker asm	1
11	12501003	送料摆杆座	reed driving rocker	1
12	12526005	送料摆杆座左销	hinge stud	1
13	101S11020	送料摆杆座左销螺钉	screw	1
14	12526006	送料摆杆座右销	hinge pin	1
15	125S11010	送料摆杆座右销螺钉	screw	1
16	12526007	送料摆杆销	hinge pin	1
17	125S15005	送料摆杆销螺钉	screw	2
18	125S20002	送料曲柄轴位螺钉	hinge screw	1
19	409S16015	送料曲柄轴位螺母	nut	1
20	12504003	送料曲柄	feed rocker shaft cranck	1
21	101S11016	送料曲柄螺钉	screw	1
22	12502004	送料轴	feed rocket shaft	1
23	12508002	送料轴薄挡圈	thrust collar	1
24	401S15006	送料轴薄挡圈螺钉	screw	2
25	H03001	送料轴轴用挡圈	retaining ring	1
26	12503012	送料轴后轴套	bushing rear	1
27	409S15004	送料轴后轴套螺钉	screw	1
28	12508002	送料轴挡圈	thrust collar	1
29	401S15006	送料轴挡圈螺钉	screw	2
30	12503013	送料轴前轴套	feed rocker shaft bushing ,front	1
31	12507001	牙架座	feed rocker	1
32	101S11016	牙架座螺钉	screw	1
35	12507002	牙架	washer	1
36	12526008	牙架销	feed bar shaft	1
37	125S11003	牙架销螺钉	screw	2
38	10123008	油线	oil wick	1
39	12514001	送料牙1/4″	reed dog (1/4″)	1
39	12514002	送料牙1/8″	reed dog (1/8″)	1
39	12514003	送料牙3/16″	reed dog (3/16″)	1
39	12514004	送料牙3/8″	reed dog (3/8″)	1
39	12514006	送料牙8558W-2,8558W-3	reed dog (8558W-2,8558W-3)	1
39	12614002	送料牙8560W-1/8″	reed dog (8560W-1/8″)	1
39	12614004	送料牙8560W-PL	reed dog (8560W-PL)	1
40	W01006	送料牙垫圈	washer	1
41	116S11005	送料牙螺钉	screw	1
42	12515007	针板1/4″	throat plate(1/4″)	1
42	12515009	针板1/8″	throat plate(1/8″)	1
42	12515010	针板3/16″	throat plate(3/16″)	1
42	12515012	针板3/8″	throat plate(3/8″)	1
42	12515016	针板8558W-2	throat plate(8558W-2)	1
42	12515017	针板8558W-3	throat plate(8558W-3)	1
42	12615004	针板8560W-1/8″	throat plate(8560W-1/8″)	1
42	12605004	针板8560W-PL	throat plate(8560W-PL)	1
43	125S17002	针板螺钉	screw	2
44	12505003	抬牙连杆	feed driving shaft connecting ro	1
45	12512019	抬牙连杆凸轮盖	feed driving eccentric thrust wa	1
46	201S11007	抬牙连杆凸轮盖螺钉	screw	2
47	12504004	抬牙后曲柄	feed driving shaft crank rear	1
48	125S20002	抬牙连杆轴位螺钉	hinge screw	1
49	409S16015	抬牙连杆轴位螺母	nut	1
50	101S11016	抬牙后曲柄紧固螺钉	screw	1
51	12502005	抬牙轴	feed driving shaft	1
53	12503012	抬牙轴后轴套部件	bushing ,rear	1
54	101S15010	抬牙轴后轴套螺钉	screw	1
55	10108003	抬牙轴后轴套挡圈	thrust collar	1
56	101S15002	后轴套挡圈螺钉	screw	2
57	12503017	抬牙轴中轴套	bushing,intermediate	1
58	101S15010	抬牙轴中轴套螺钉	screw	1
59	12503020	抬牙轴前轴套	feed rocker shaft bushing,front	1
60	12504005	抬牙轴前曲柄	feed rocker shaft crank	1
61	201S11026	抬牙轴前曲柄螺钉	screw	2
62	12505004	牙架连杆	feed bar link	1
63	12508003	牙架连杆挡圈	thrust collar	1
64	125S15003	牙架连杆挡圈螺钉	screw	2
65	10423004	油线	oil wick	1
66	12528001	牙架连杆锥孔垫圈	counter-sunk washer	1
67	125S17006	牙架连杆垫圈螺钉	screw	1
69	12528003	牙加销垫圈	feed bar shaft washer	1

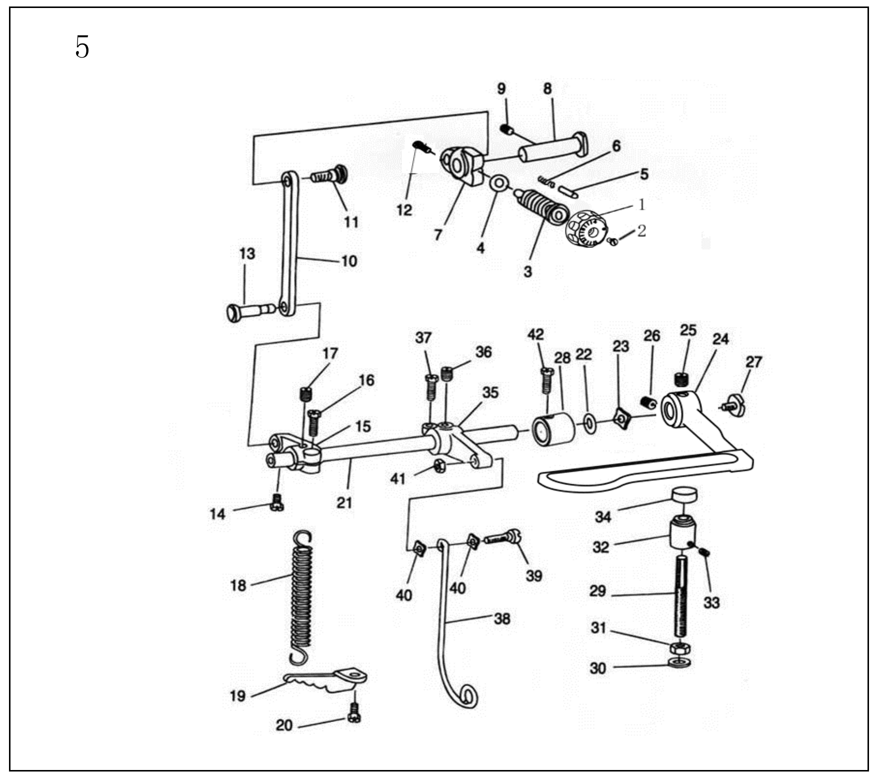

五、送料调节分组件 Feed regulating components

序号NO.	公司件号 Part NO.	名称 PartName	零件描述 Description	数量 Number
1	1251100300	送料距旋钮部件(JACK)	stitch dial asm	1
1	1251101900	送料距旋钮部件(BRC)	stitch dial asm	1
2	101S11022	送料距旋钮螺钉	screw	1
3	12526030	送料调节螺柱	feed regulating screw	1
4	001040	送料调节螺柱O形圈	o-rubber ring	1
5	10126015	送料距锁合销	stitch dial lock pin	1
6	10127010	送料距锁合销簧	stitch dial lock spring	1
7	12504006	送料调节器	feed regulation	1
8	12526011	送料调节器销	hinge pin	1
9	101S15006	送料调节器销螺钉	screw	1
10	12505005	送料调节器连杆	feed regulator connecting rod	1
11	12526020	调节器连杆轴	regulator connecting shaft	1
12	116S11017	调节器连杆轴螺钉	nut	2
13	12526012	拉簧调节曲柄销	tension spring suspension stud	1
14	116S11017	拉簧调节曲柄销螺钉	screw	1
15	12504007	拉簧调节曲柄	tension spring suspension cranck	1
16	101S11021	调节曲柄紧固螺钉	clamp screw	1
17	101S15006	调节曲柄定位螺钉	screw	1
18	12527004	倒送料轴拉簧	tension spring	1
19	12512020	拉簧固定板	suspension bracket	1
20	101S11008	拉簧固定板螺钉	screw	1
21	12502006	倒送料轴	reverse feed control lever shaft	1
22	001014	倒送料轴O形圈	rubber ring ,large	1
23	W03010	倒送料轴弹性垫圈10	waved washer	1
24	303297	倒送料扳手	reverse feed control lever	1
25	101S15011	倒送料扳手定位螺钉	screw	1
26	101S15007	倒送料扳手螺钉	screw	1
27	125S11015	倒送料轴端螺钉	end screw	1
28	12508006	倒送料轴挡圈	thrust collar	1
29	125S30007	倒送料挡块螺杆	screw	1
30	W01015	挡块螺杆垫圈	washer	1
31	209S16006	挡块螺杆螺母	nut	1
32	300975	倒送料挡块	lever stopper	1
33	125S15004	倒送料挡块螺钉	screw	1
34	12522009	倒料挡块橡胶垫	rubber cushion	1
35	12504008	倒送料曲柄	control lever crank,rear	1
36	101S15006	倒送料曲柄定位螺钉	screw	1
37	101S11021	倒送料曲柄螺钉	screw	1
38	12512021	倒送料连杆	feed driving rocker arm connecti	1
39	125S20006	倒送料连杆轴位螺钉	screw	1
40	W04002	倒送料连杆轴位螺圈	washer	2
41	401S16004	倒送料连杆轴位螺母	nut	1
42	101S11020	倒送料轴挡圈螺钉	screw	1

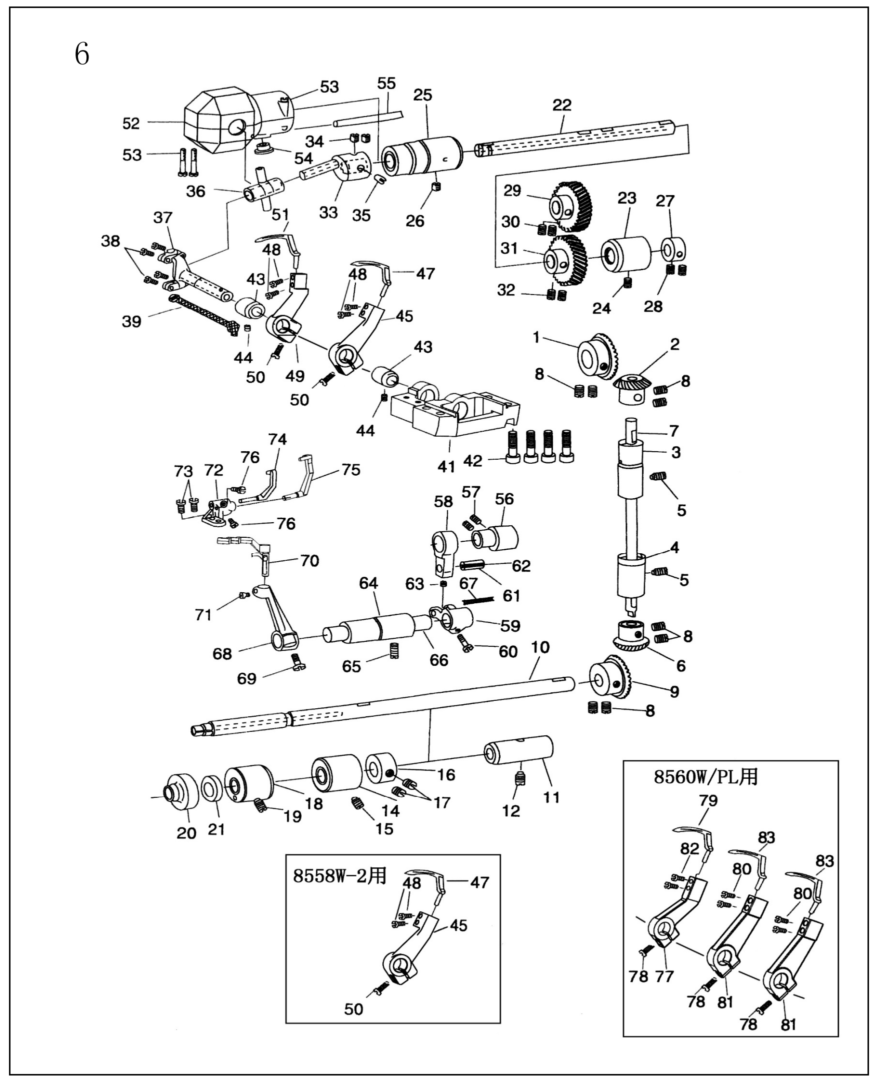

六、弯针勾线分组件 Looper thread retainer components

序号NO.	公司件号 Part NO.	名称 PartName	零件描述 Description	数量 Number
1	10125004	上轴伞齿轮	gear asm	1
2	10125003	轴轴上伞齿轮	pinion asm	1
3	12503021	轴轴上轴套	bushing,upper	1
4	12503020200	轴轴下轴套部件	bushing,lower	1
5	101S15001	轴轴轴筒螺钉	screw	2
6	10125003	轴轴下伞齿轮	gear asm	1
7	12502007	轴轴	upright,shaft	1
8	101S15007	伞齿轮螺钉	bushing,front asm,screw	8
9	12525001	下轴伞齿轮	gear asm	1
10	12502008	下轴	lower shaft asm	1
11	12503025	下轴后轴套	bushing ,rear	1
12	101S15010	下轴后轴筒螺钉	screw	1
14	12503020600	下轴中轴套部件	bushing,intermediate	1
15	101S15001	下轴中轴筒螺钉	screw	1
16	12508005	下轴挡圈	thrust collar asm	1
17	101S15007	下轴挡圈螺钉	screw	2
18	12503032200	下轴轴前部件	bushing ,front	1
19	101S15001	下轴轴筒螺钉	screw	1
20	12503046	下轴前轴套油杯套	looper thread guard bushing	1
21	12522200700	下轴前轴套油杯部件	looper thread guard bushing asm	1
22	12502009	弯针轴	looper rocket shaftr	1
23	12503020600	弯针轴后轴套部件	bushing,intermidate	1
24	101S15010	弯针后轴筒螺钉	screw	1
25	12503038000	弯针轴前轴套部件	bushing,front	1
26	101S15001	弯针轴前轴筒螺钉	screw	1
27	12508005	弯针轴挡圈	thrust collar asm	1
28	101S15007	弯针轴挡圈螺钉	screw	2
29	12525002	上动弯针齿轮	gear asm,upper	1
30	101S15007	上动弯针齿轮螺钉	screw	2
31	12525003	转动弯针齿轮	gear asm ,lower	1
32	101S15007	转动叉针齿轮螺钉	screw	2
33	12504009	弯针曲柄	looper crank asm	1
34	101S15007	弯针曲柄螺钉	screw	2
35	125S30008	弯针曲柄调节螺钉	screw	1
36	12504021100	弯针摆轴十字铰头组件	Trunbion asm	1
37	12502010000	弯针摆轴座件	looper rocker shaft asm	1
38	209S11009	弯针摆轴盖螺钉	screw	4
39	10123004	油线	oile wick	1
41	12501005	弯针架座	looper mounting base	1
42	125S13001	弯针架座螺钉	screw	4
43	12503042	弯针摆轴后套	bushing,rear	2
44	101S15006	弯针摆轴后筒螺钉	screw	2
45	12504012	左弯针 曲柄	looper holder asm(left)	1
47	12517001	左弯针	looper(left)	1
48	209S11012	弯针螺钉	screw	4
49	12504013	右弯针 曲柄	looper holder asm.(right)	1
50	101S11016	弯针 曲柄螺钉	screw	2
51	12517002	右弯针	looper(right)	1
52	125120220 0	弯针 曲柄罩壳部件	crank cover asm	1
53	125S11007	曲柄罩壳螺钉	screw	3
54	GR1462	曲柄罩壳孔塞	Rubber plug	1
55	12921002	JK18129 油管2X5	vinyl tube	1
56	12510005	护针凸轮	needle guard cam asm	1
57	101S15007	护针凸轮螺钉	screw	2
58	12505007	护针连杆	needle guard crank rod	1
59	12504014	护针叉形曲柄	rear needle guard rocker fork	1
60	101S11020	护针叉形曲柄螺钉	screw	1
61	125R6014	护针 曲柄销	pin	1
62	10123004	油线	oil wick	1
63	101S15006	护针 曲柄销螺钉	screw	1
64	12503043	护针轴套	bushing	1
65	101S15010	护针轴筒螺钉	screw	1
66	12502012	护针轴	needle guard driving shaft asm	1
67	10128008	护针轴油线	oil wick	1
68	12504015	护针 曲柄	rear needle guard rocker arm asm	1
69	101S11016	护针 曲柄螺钉	screw	1
70	12517003	摆动护针(8558W:1/4",1/8",3/8",3/16")	driving needle guard(8558W:1/4",1/8",3/8",3/16")	1
70	12517009	摆动护针(8558W-2)	driving needle guard(8558W-2)	1
70	12517010	摆动护针(8558W-3)	driving needle guard(8558W-3)	1
70	12517003	摆动护针(8560W,8560W-PL)	driving needle guard(8560W,8560W-PL)	1
71	209S11009	摆动护针杆螺钉	screw	1
72	12501006	护针 杆座	needle guard base	1
73	101S11011	护针 杆座螺钉	screw	2
74	12517004	右固定护针 杆	counter needle guard,left	1
74	12605001	右固定护针杆(8560W,8560W-PL)	counter needle guard,right(8560W,8560W-PL)	1
75	12517005	右固定护针 杆	counter needle guard,right	1
75	12517011	右固定护针杆(8558W-3)	counter needle guard,right(8558W-3)	1
76	101S11005	左右固定护针杆螺钉	screw	2
77	12604003	中右弯针 曲柄	looper holder asm.(right)	1
78	125S11001	弯针 曲柄螺钉	screw	3
79	12517002	右弯针	looper(right)	1
80	201S11007	左弯针螺钉	screw (left)	4
81	12604002	左弯针 曲柄	looper holder asm(left)	2
82	209S11012	右弯针螺钉	screw(right)	2
83	12517001	左弯针	looper(left)	2

7

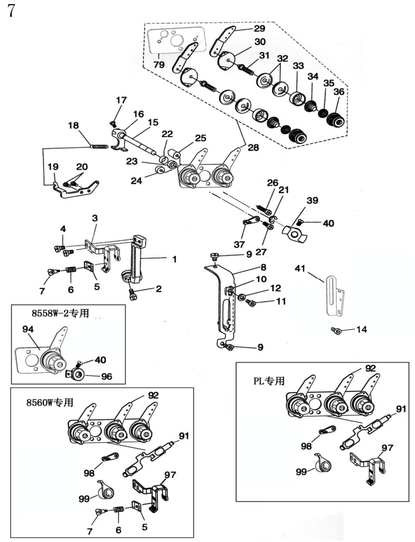

7

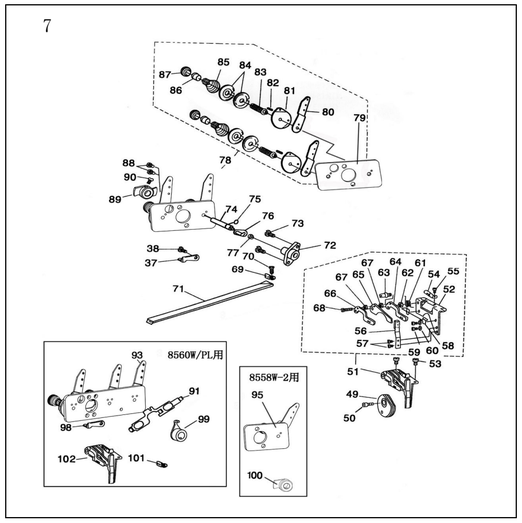

七、挑线、松线、夹线分组件 Thread take-up,tension, and tension releasing assembly complete

序号NO.	公司件号 Part NO.	名称 PartName	零件描述 Description	数量 Number
1	12505008	线线连杆	thread take-up lever	1
2	209S11021	线线连杆螺钉	screw	1
3	12512025	线线杆	thread take-up	1
4	101S11005	线线杆紧固螺钉	screw	2
5	12512026	线线杆夹线板	tension plate	1
6	12527014	线线杆夹线簧	tension spring	1
7	12SS11018	线线杆夹线板加螺钉	screw	1
8	12512027	挡线杆护罩	thread take up lever guard	1
9	101S11031	线线杆护罩螺钉	screw	2
10	12512028	线量调节板	take-up thread tension lever	1
11	112S11014	线量调节板螺钉	screw	1
12	W01006	调节板螺钉垫圈	washer	1
14	101S11031	中间导线线螺钉	screw	1
15	12502021	松线轴	tension release shaft	1
16	12504016000	面线松线曲柄部件	tension release arm asm	1
17	101S11012	面线松线曲柄螺钉	screw	1
18	12527015	松压脚后杠杆弹簧	spring	1
19	12512031	后杠杆弹簧固定板	suspension bracket	1
20	112S11014	后杠杆弹簧固定板螺钉	screw	2
21	H05013	松线轴挡圈	snap ring	1
22	O01027	松线轴O型圈	Oil seal ring	1
23	12509004	松线轴座	tension release shaft spacer	1
24	12509011	夹线器下安装垫	spacer(A)for installing plate	1
25	12509006	夹线器上安装垫	spacer(B) for installing plate	1
26	125S30010	夹线器上安装垫螺钉	screw	1
27	125S30010	夹线器下安装垫螺钉	screw	1
28	12S1300100	面线夹线器部件	needle thread tension asm	1
29	12512032	面线座面导线板	needle thread tension guide plate	2
30	12512033	面线双面导线板	tension thread tension guide	2
31	125S30003	夹线螺钉	looper thread tension post	2
32	10112005	面线夹线板	tension disc	4
33	12511004	面线松线座	tension disc presser rube	2
34	10127002	面线夹线簧	tension spring	2
35	10112007	面线止动板	tension disc stopper	2
36	12511009	面线夹线螺母	tension nut	2
37	12512035	导线钩	frame thread guide	2
38	112S11014	导线钩螺钉	screw	1
39	12504017	面线松线爪	tension release latch	1
40	101S11012	面线松线爪螺钉	screw	1
41	12512050	中间导线钩	frame thread eyelet	1
41	12612010	中间导线钩(三针)	frame thread eyelet (three needle)	1
49	12S1000600	底线打线凸轮	looper thread take-up cam	1
50	12SS17004	底线打线凸轮定位螺钉	screw	1
51	12S1300200	凸轮导线钩部件	looper thread guide plate	1
52	12512040	凸轮导线架	thread guide plate	1
53	112S11014	凸轮导线架螺钉	screw	2
54	12512041	底线双线导线钩	Looper thread guide asm	1
55	12SS11004	底线双线导线钩螺钉	screw	1
56	12512042	底线导线止动簧	thread guide stopper spring	1
57	12SS11004	底线导线止动簧螺钉	screw	2
58	12527007	底线原线钢丝	cast-off wire	1
59	101S11027	底线原线钢丝螺钉	screw	2
60	W01005	底线原线钢丝螺钉垫圈	washer	2
61	12527008	底线导线簧	thread guide spring	1
62	114S16004	凸轮过线螺钉螺母	nut	1
63	12SS30002	凸轮过线螺钉	thread guide stud	1
64	12512043	凸轮导线钩(右)	looper thread guide,right	1
65	12512044	凸轮原线爪	cast-off plate	1
66	12512045	凸轮导线钩(左)	looper thread guide,left	1
67	12509007	凸轮导线环	collar	2
68	12SS11005	凸轮导线钩螺钉	screw	1
69	12512046	底线导线钩	looper thread guide	1
70	109S17001	底线导线钩螺钉	screw	1
71	12512047	底线导线管	looper thread guide tube	1
72	12504018	松线轴套	tension release shaft bushing	1
73	12SS11020	松线轴底螺钉	screw	2
74	12502014	底线松线轴	looper thread release shaft	1
75	O01004	底线松线轴O型圈	rubber ring	1
76	1250401900	底线松线轴曲柄部件	tension release arm asm	1
77	114S16004	底线松线轴螺母	nut	1
78	1251300300	底线夹线器部件	lower thread tension asm	1
79	12512055	夹线器安装板	tension installing plate	2
80	12512049	底线座面导线板	looper thread tension control pl	2
81	12512050	底线双面导线板	thread guide	2
82	P01009	底线夹线板止转销	spring pin	2
83	125S30003	夹线螺钉	looper thread tension post	2
84	12512051	底线夹线板	tension disc	4
85	12527009	底线夹线簧	looper thread tension spring	2
86	12509008	底线夹线止转圈	tension spring bushing	2
87	125S16001	底线夹线螺母	tension post nut	2
88	101S11031	夹线器安装板螺钉	screw	2
89	12504020	底线松线爪	looper thread release latch	1
90	101S11012	底线松线爪螺钉	screw	1
91	12512004	松线器松板	Thread release Slide plate	1
92	1261300900	面线夹线器部件	needle thread tension asm	1
93	1261301000	底线夹线器部件	lower thread tension asm	1
94	1251300400	面线夹线器部件	needle thread tension asm	1
95	1251300500	底线夹线器部件	lower thread tension asm	1
96	12504022	面线松线爪	tension release latch	1
97	12638001	线线杆	thread take-up	1
98	12613001	导线钩	frame thread guide	1
99	1260400400	松线爪部件	tension release latch	1
100	12504023	底线松线爪	looper thread release latch	1
101	12613006	底线导线钩	looper thread guide	1
102	1261300200	凸轮导线钩组件	looper thread guide plate	1

8

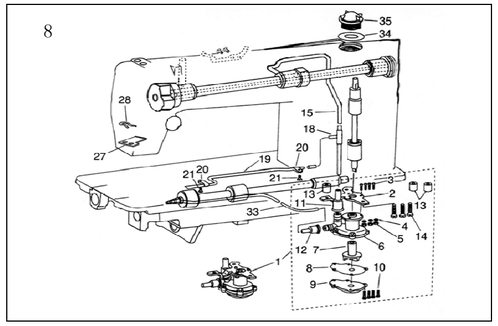

八、润滑分组件 Lubrication

序号NO.	公司件号 Part NO.	名称 PartName	零件描述 Description	数量 Number
1	1232000100	油泵部件	lubrication oil pump asm	1
2	12512052	油泵安装板	oil pump installing base	1
3	125S30011	油泵安装螺钉	screw	4
4	GR1550	油泵安装垫圈	washer	3
5	GL138	油泵安装螺母	Nut	3
6	1232000200	油泵油芯件	washer	1
7	12520003	油泵叶轮	oil pump impeller	1
8	12512053	油泵叶轮托板	oil pump impeller cover	1
9	1232000400	油泵盖部件	lubricating oil pump cover	1
10	125S30012	油泵盖螺钉	screw	4
11	12536002	上轴供油管接头	rubber joint	1
12	12536003	下轴供油管接头	rubber joint	1
13	12509011	油泵垫圈	Collar	3
14	12533009	油泵螺钉	screw	3
15	12521002	上轴供油管	Main shaft oil tube	1
18	12536004	齿轮供油管座及接头	Oil sight window base	1
19	12521003	齿轮供油管	gear oil pipe	1
20	12512054	齿轮供油管夹	holder	2
21	101S11025	凸轮供油管夹螺钉	screw	2
27	10423002	回油毡	oil felt	1
33	12521004	下轴供油管	oil tube	1
34	10122019	油窗O形圈	or-rubber ring	1
35	10111004	油窗	oil sight window	1

9

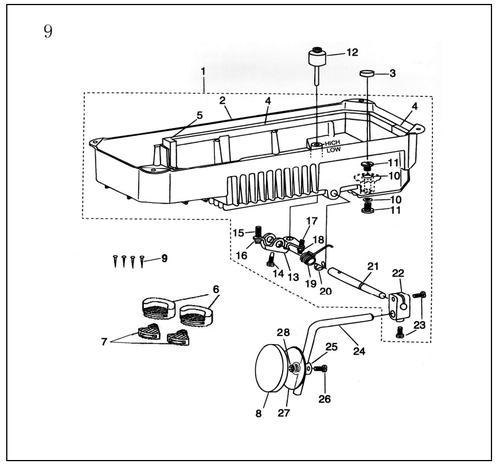

九、油盘、膝抬压脚分组件 Oil reservoir & knee lifter components

序号NO.	公司件号 Part NO.	名称 PartName	零件描述 Description	数量 Number
1	1250100700	油盘部件	oil reservoir asm	1
2	12501009	油盘	oil reservoir	1
3	10131001	油盘磁铁	oil reservoir magnet	1
4	12522018	油盘侧面垫	gasket	2
5	12522019	油盘端面垫	gasket	1
6	10122023	档头防震垫块(大)	Cushion(big)	2
7	10122022	档头防震垫块(小)	Cushion(small)	2
8	10122024	盘座板软垫	knee press plate cover	1
9	101S30010	油盘油钉	nail	4
10	10122001	排油螺钉O形圈	oil drain cap gasket	2
11	101S11028	排油螺钉	oil drain screw	2
12	12531004	松压脚压杆	knee press lifter rod	1
13	12512059	松压脚双向曲柄	lifting	1
14	101S12002	双向曲柄螺钉	positioning screw	1
15	101S15012	双向曲柄限位螺钉	positioning screw	2
16	101S16004	双向曲柄限位螺母	nut	2
17	101S15012	双向曲柄限位螺钉	positioning screw	2
18	101S16004	双向曲柄限位螺母	nut	2
19	10122016	双向曲柄拉簧	spring	1
20	H05010	松压脚轴开口挡圈	thrust ring	1
21	12502015	松压脚轴	knee press rod	1
22	10101008	松压脚座轴杆等头	bearing bracket	1
23	101S12003	座轴杆等头螺钉	clamp screw	2
24	10112028	座轴杆	knee lifter plate rod	1
25	10112030	座轴板等头	knee press plate cover joint	1
26	101S12004	座轴板等头螺钉	screw	1
27	10112029	座轴板	knee press plate	1
28	10122025	座轴杆垫	Rubber	1

10

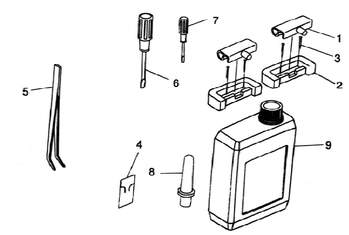

十、机头附件 Machine head accessories

序号NO.	公司件号 Part NO.	名称 PartName	零件描述 Description	数量 Number
1	1011203100	机头连接铰链部件	machine hinge plate asm	2
2	10122060	机头连接铰座	machine hinge plate	2
3	101S30010	机头连接铰座钉	nail	4
4	12617005	针杆	needle	16
5	20131051	镊子	tweezer	1
6	10131003	螺丝刀(中)	screw driver(M)	1
7	10131004	螺丝刀(小)	screw driver(S)	1
8	10111011	机头支柱	machine rest pin	1
9	1011101200	油箱部件	lubricating unit case asm	1

11

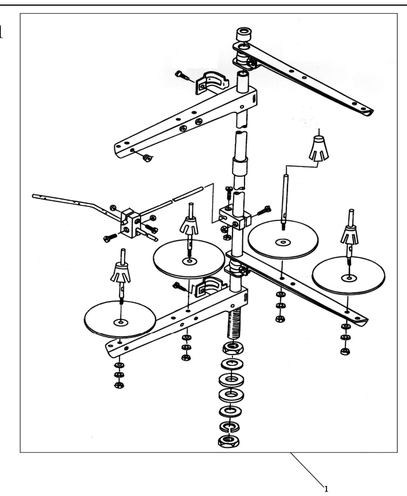

十一、四线团架分组件 Quadruple-thread spool stand sam

序号NO.	公司件号 Part NO.	名称 PartName	零件描述 Description	数量 Number
1	20131073	线架组件	Spool stand complete	1
1	1263100200	线架组件(8560W,8560W-PL)	Spool stand complete	1

公司地址(Address of Company)：
台州市椒江区机场南路15号
No.15 Rd Airport South , Jiaojiang District Taizhou City , Zhejiang , P.R.C
邮编(Zip Code)：318000
国内销售部(Domestic Trade Department)：
电话(TEL)：0086-0576-88177788 88177789
传真(FAX)：0086-0576-88177758
国贸部(International Trade Department)：
电话(TEL)：0086-0576-88177782 88177774
传真(FAX)：0086-0576-88177787
服务热线：400-8876858
http://www.chinajack.com

资料如有更改，恕不另行通知，以实物为准。
You will be not informed if the file has been revised.Please set sample as standard.