零 件 样 本

PARTS BOOK

目录/CONTENTS

Ａ１．机体部分 / Machine body……1
Ａ２．机体部分 / Machine body……5
Ａ３．补助板装置 / Auxiliary plate mechanism……7
Ｂ．上轴、针杆装置 / Upper shaft and needle bar machanis ……9
Ｃ１．送料装置 / Feed mechanism ……11
Ｃ２．送料装置 / Feed mechanism ……15
Ｃ３．夹具装置/Clamp mechanism ……19
Ｄ１．抬压装置 / Work clamp lifter mechanism ……21
Ｄ２．抬压装置 / Work clamp lifter mechanism ……25
Ｅ．下轴装置 / Lower shaft mechanism ……27
Ｆ．供油润滑装置 / Lubrication……29
Ｇ．穿线装置 / Threading mechanism ……33
Ｈ．卷线装置 / Bobbin winder mechanism ……35
Ｊ．切线装置 / Thread trimmer mechanism ……37
Ｋ．扫线装置 / Thread wiper mechanis ……41
Ｌ．松线装置 / Tension release mechanism ……43
Ｐ．空压装置 / Air pressure mechanism…… ……45
Ｑ．电气部品装置 / Power supply equipment mechanism ……47
Ｓ．马达装置 /Motorme chanism ……49
Ｔ．踏板关系 / Foot switch pedal mechanism ……51
Ｕ．电控箱装置 / ELectric Control Panel……53
Ｚ．附件 / Accessories……55
Ｗ４．附属装置(选购件) / Attachment set(Option parts) ……57
Ｇａ．工模具一览表 / Gauge parts list ……59

A1 . 机体部分 / Machine body

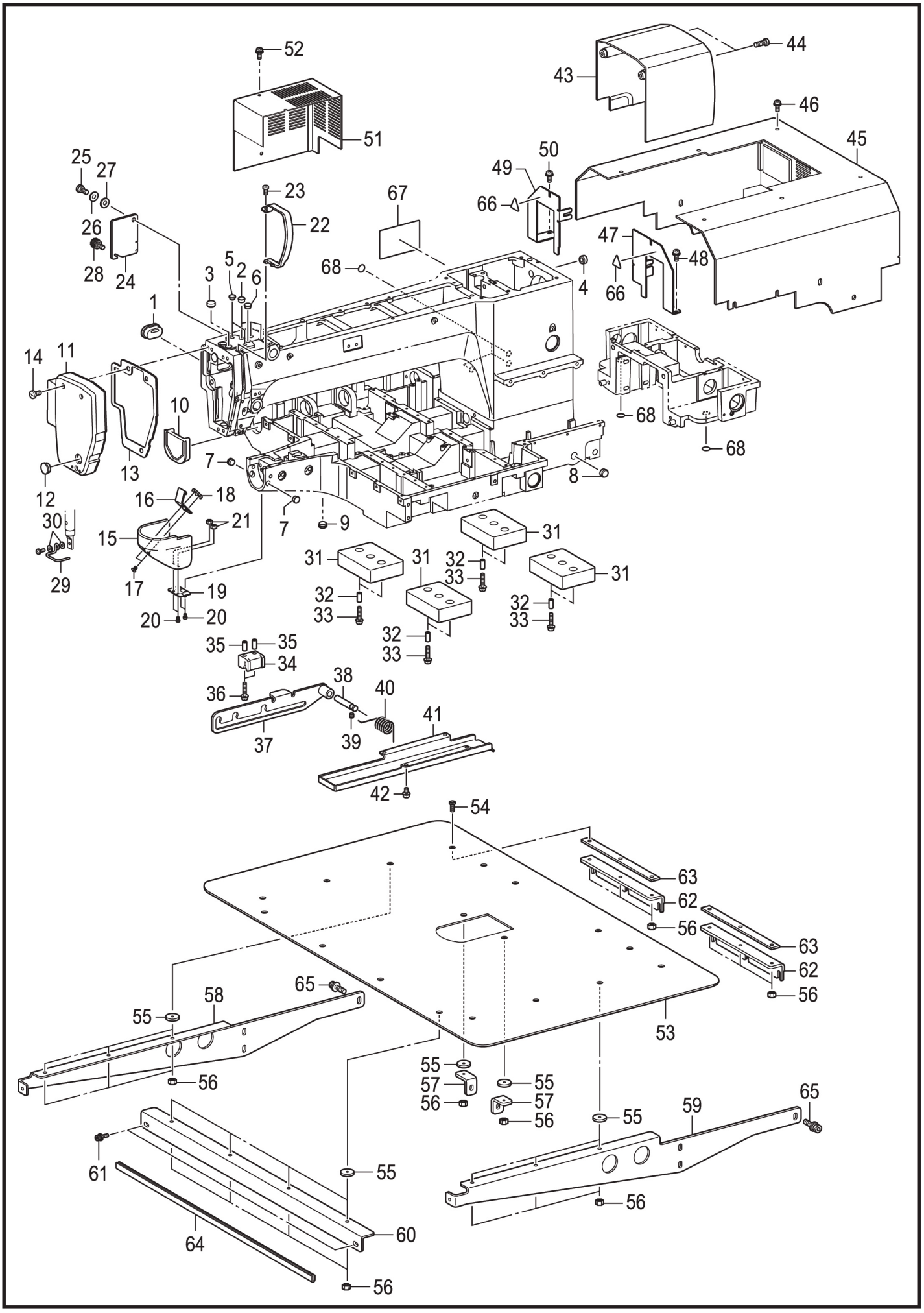

A1、机体部分/Machine body

序号 No.	件号 Part.No.	参考件号 Ref.No.	零部件名称	NAME OF PARTS	数量 Amt.	备注
1	41722001	SA4596001	橡皮塞20-15	RUBBER CAP 20-15	1	
2	41722003	104821001	橡皮塞10.5	RUBBER CAP 10.5	2	
3	41722009	S20164001	橡皮塞13	RUBBER CAP 13	1	
4	41722009	S20164001	橡皮塞13	RUBBER CAP 13	1	
5	41222006	104450101	橡皮塞8	RUBBER CAP 8	2	
6	41222002	117936001	橡皮塞9.4	RUBBER CAP 9.4	1	
7	41722007	S44010001	橡皮塞11.5	RUBBER CAP 11.5	2	
8	41722301	150592001	橡皮塞16	RUBBER CAP 16	1	
9	41722004	104449001	橡皮塞15.5	RUBBER CAP 15.5	1	
10	41722302	SA8548101	底板盖	BED COVER	1	
11	301381	SA4600001	面板	FACE PLATE	1	
11	30337001		商标牌		1	
12	41722004	104449001	橡皮塞15.5	RUBBER CAP 15.5	1	
13	41712003	SA4601001	面板垫片	F-PLATE PACKING	1	
14	S04038	062061016	螺钉M6×10	SCREW PAN M6×10	3	
15	301383	SA4603101	大旋梭盖	SHUTTLE RACE COVER	1	
16	41712005	SA6272001	大旋梭盖挂钩D	SHUTTLE RACE COVER HOOK D	1	
17	S02031	004300513	螺钉M3×5	SCREW,FLAT M3×5	2	
18	41712006	SA3264001	板螺母	NUT PLATE	1	
19	4171220200	SA6207001	铰链	HINGE	1	
20	S04075	062300506	螺钉M3×5	SCREW PAN M3×5	4	
21	N01013	021300103	螺母M3	NUT ,1 M3	2	
22	311384	SA3200101	挑线杆防护罩	THREAD TAKE-UP COVER	1	
23	S04079	062401006	螺钉M4×10	SCREW PAN M4×10	1	
24	41712008	SA4604001	间歇盖板	STEPPING COVER	1	
25	417S30012	SA3306001	段螺钉7-3	SHOULDER SCREW ,7-3	1	
26	41728020	120265002	弹簧垫圈	SPRING WASHER	1	
27	41728035	S07350002	垫圈	WASHER PLAIN	1	
28	41711005	S36475000	螺钉M5	SCREW,M5	1	
29	41712009	SA8679001	护指器	FINGER GUARD	1	
30	41728025	025350332	平垫圈L3.5	WASHER PLAIN L3.5	2	
31	41722303	SA8670001	防震垫	CUSHION	4	
32	41708301	SA8680001	管套	SPACER	8	
33	417S30301	0A5402005	螺栓(带垫圈)M4×20DB	SCREW PAN(S/P WASHER)M4×20	8	
34	41722304	SA8880001	防震橡皮垫	RUBBER CUSHION	1	
35	41708301	SA8680001	管套	SPACER	2	
36	417S30301	0A5402005	螺栓(带垫圈)M4×20DB	SCREW PAN(S/P WASHER)M4×20	2	
37	4171230100	SA8549001	头部支撑杆	SUPPORT LEVER	1	
38	41702301	SA8550001	头部支撑杆轴	SUPPORT LEVER SHAFT	1	
39	S10019	012060636	螺钉M6×6	SET SCREW SOCKET(FT)M6×6	1	
40	41727301	SA8551001	弹簧	TOSHON SPRING	1	
41	41712303	SA8552001	供油盘	OIL PAN	1	
42	417S30025	0A5401006	螺栓(带垫圈)M4×10DB	SCREW PAN(S/P WASHER)M4×10	4	
43	41711316	SA8553001	马达罩	MOTOR COVER	1	
44	S04031	062061616	螺栓M6×16	SCREW PAN M6×16	2	
45	301748	SA8816001	后盖组件	REAR COVER ASSY	1	
45	41722317		后盖减震橡皮A	CUSHION A	2	
45	41722318		后盖减震橡皮B	CUSHION B	2	
46	417S30025	0A5401006	螺栓(带垫圈)M4×10DB	SCREW PAN(S/P WASHER)M4×10	16	
47	301749	SA8555001	后盖FR	HEAR COVER FR	1	
48	417S30025	0A5401006	螺栓(带垫圈)M4×10DB	SCREW PAN(S/P WASHER)M4×10	3	
49	301751	SA8556001	后盖FL	HEAR COVER FL	1	
50	417S30025	0A5401006	螺栓(带垫圈)M4×10DB	SCREW PAN(S/P WASHER)M4×10	3	
51	301750	SA8557001	马达盖(X)	X MOTOR COVER	1	

A1 . 机体部分 / Machine body

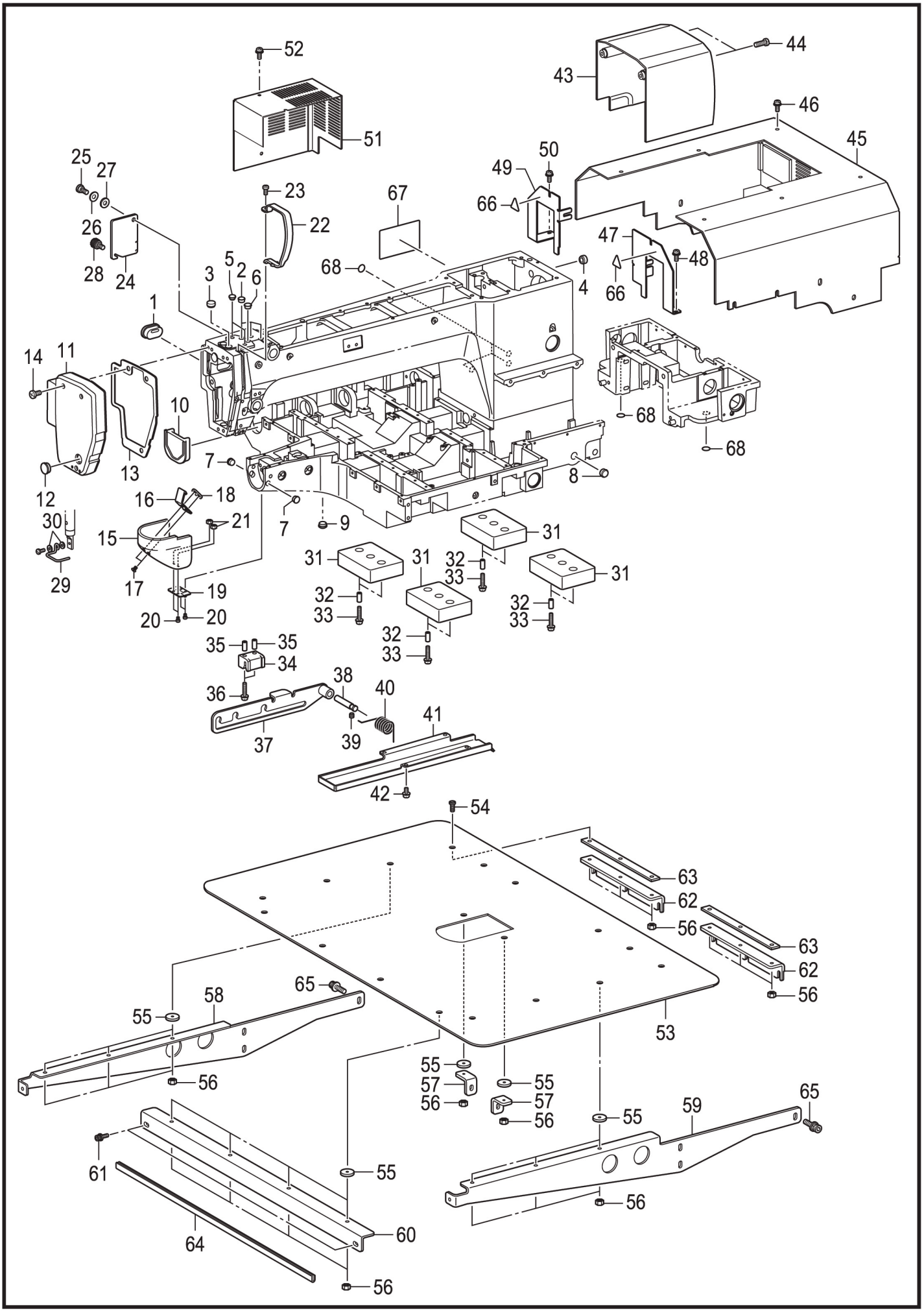

A1、机体部分/Machine body

52	417S30025	0A5401006	螺栓(带垫圈)M4×10DB	SCREW PAN(S/P WASHER)M4×10	4	
53	400998	SA8559001	针板补助板	AUXILIARY PLATE	1	
54	417S15003	SA8560001	螺钉M4×12	SCREW M4×12	18	
55	41722010	SA4677101	补助板缓冲	AUXILIARY PLATE CUSHION	12	
56	407N01002	021400206	自锁螺母M4	NUT 2 M4	18	
57	41712023	SA4676101	补助板支架	AUXILIARY PLATE BRACKET	2	
58	41712309	SA8561001	补助板支架L	AUXILIARY PLATE BRACKET L	1	
59	41712310	SA8562001	补助板支架R	AUXILIARY PLATE BRACKET R	1	
60	41712311	SA8563001	补助板支架M	AUXILIARY PLATE BRACKET M	1	
61	417S30302	S55481001	螺栓(带垫圈)M4×12	SCREW PAN(S/P WASHER)M4×12	2	
62	41712312	SA8564001	补助板支架B	AUXILIARY PLATE BRACKET B	2	
63	41722305	SA8672001	补助板防震垫B	AUXILIARY PLATE CUSHION B	2	
64	41722306	SA8879001	调整长条L540	TRIMS L540	1	
64	S04078	062400816	螺栓M4×8	SCREW PAN M4×8	4	
65	417S30037	S42446001	螺栓M6×14	BOLT SOCKET(S/P WASHER)M4×12	14	
69	41708306	SA8680001	管套D	SPACER D	1	
70	S05119	018402036	螺栓M4×20	BOLT SOCKET M4×20	1	
71	41728004	SA4302001	垫圈	WASHER	2	
72	417S30302	S55481001	螺栓(带垫圈)M4×12	SCREW PAN(S/P WASHER)M4×12	2	

A2 . 机体部分 / Machine body

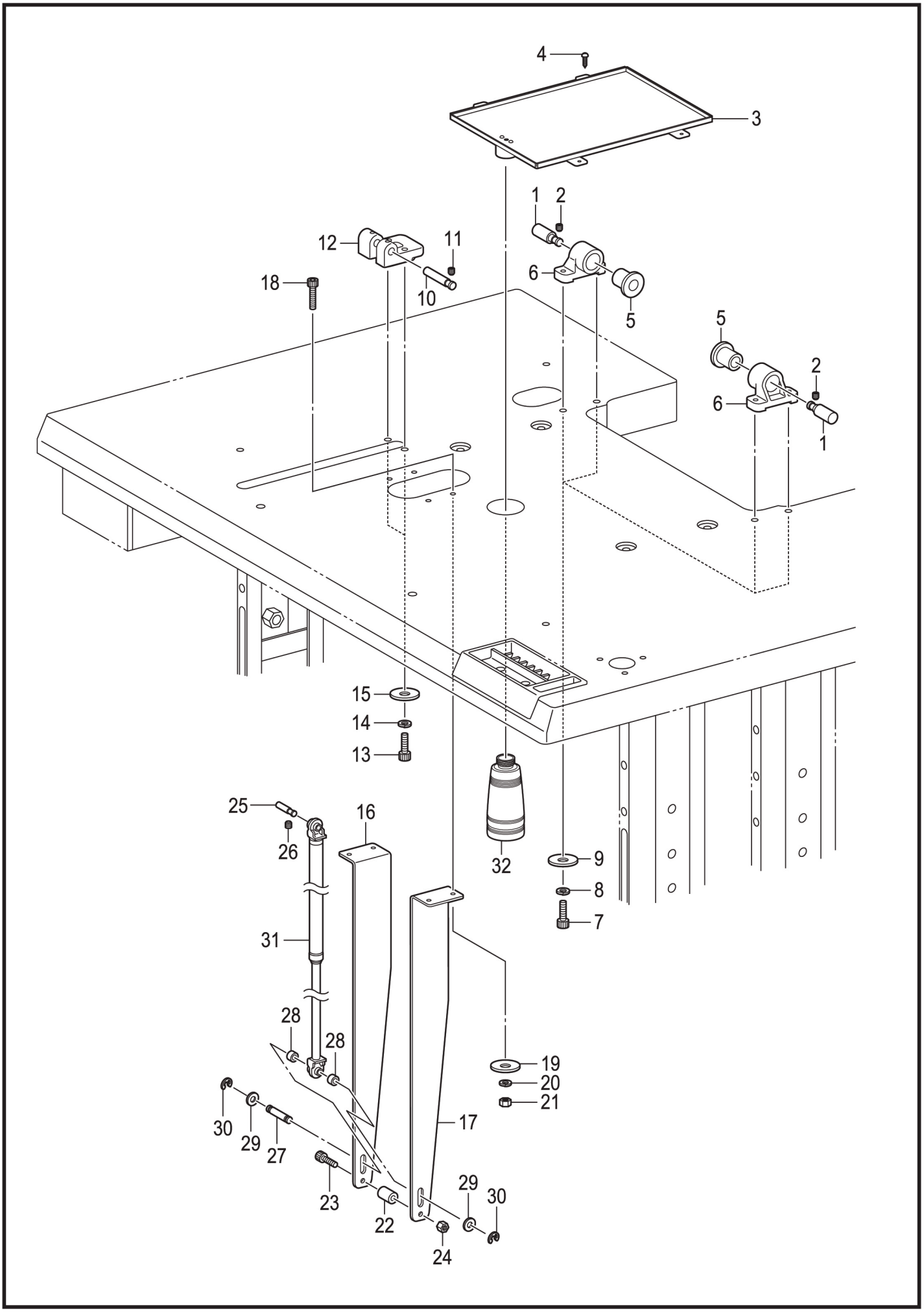

A2、机体部分/Machine body

序号 No.	件号 Part.No.	参考件号 Ref.No.	零部件名称	NAME OF PARTS	数量 Amt.	备注
1	41702302	SA8668001	头部铰链轴	HINGE SHAFT	2	
2	S10019	012060636	螺钉M6×6	SET SCREW SOCKET（FT）M6×6	2	
3	4171231400	SA8665001	油盘组件	OIL PAN ASSY	1	
5	41722307	SA8667001	橡皮轴套	RUBBER BUSH	2	
6	41701301	SA8669001	铰链轴支架	HINGE HOLDER	2	
7	S05125	018087036	螺栓M8×70	BOLT SOCKET M8×70	4	
9	41728030	213650001	垫圈2.3×8.5×38	WASHER 2.3×8.5×38ST	4	
10	41702301	SA8550001	头部支撑杆轴	SUPPORT LEVER SHAFT	1	
11	S10019	012060636	螺钉M6×6	ST SCREW SOCKET （FT）M6×6	2	
12	41701302	SA8671001	头部支撑座	SUPPORT LEVER BASE	1	
13	S05125	018087036	螺栓M8×70	BOLT SOCKET M8×70	2	
14	41228005	028080246	弹簧垫圈2-8	WASHER SPRING 2-8	2	
15	41728030	213650001	垫圈2.3×8.5×38	WASHER 2.3×8.5×38ST	2	
16	41712315	SA8673001	减震器支撑L	HOLDER ABSORBER L	1	
17	41712316	SA8674001	减震器支撑R	HOLDER ABSORBER R	1	
18	S05126	SA3387001	螺栓M6×75	BOLT,SOCKET M6×75	4	
19	41728030	213650001	垫圈2.3×8.5×38	WASHER 2.3×8.5×38ST	4	
20	W02009	028080246	弹簧垫圈2-6	WASHER SPRING 2-6	2	
21	N01021	021060106	螺母M6	NUT ,1 M6	4	
22	41703027	SA5251001	垫圈	SPACER	1	
23	S05117	018064031	螺栓M6×40	BOLT SOCKET M6×40	1	
24	N01021	021060106	螺母M6	NUT ,1 M6	1	
25	41702023	SA4847001	轴U	SHAFT U	1	
26	S10019	012060636	螺钉M6×6	SET SCREW SOCKET （FT）M6×6	1	
27	41702024	S17974101	轴D	SHAFT D	1	
28	41703028	S17975100	轴套GS	SHAFT COLLAR GAS	2	
29	41728018	025080132	垫圈S8	WASHER PLAIN S8	2	
30	H05031	048060342	挡圈E6	RETAINING RING E6	2	
31	41730301	SA8675001	减震器	SHOCK ABSORBER GAS	1	
32	41711066	114486002	废油壶	OILER	1	
32	41711006	154467001	废油回收壶盖	DUST OILER	1	
32	S04082		螺钉M3×6	SCREW PAN M3×6	2	
32	N01013	021300103	螺母M3	NUT ,1 M3	2	

A3 . 补助板装置 / Auxiliary plate mechanism

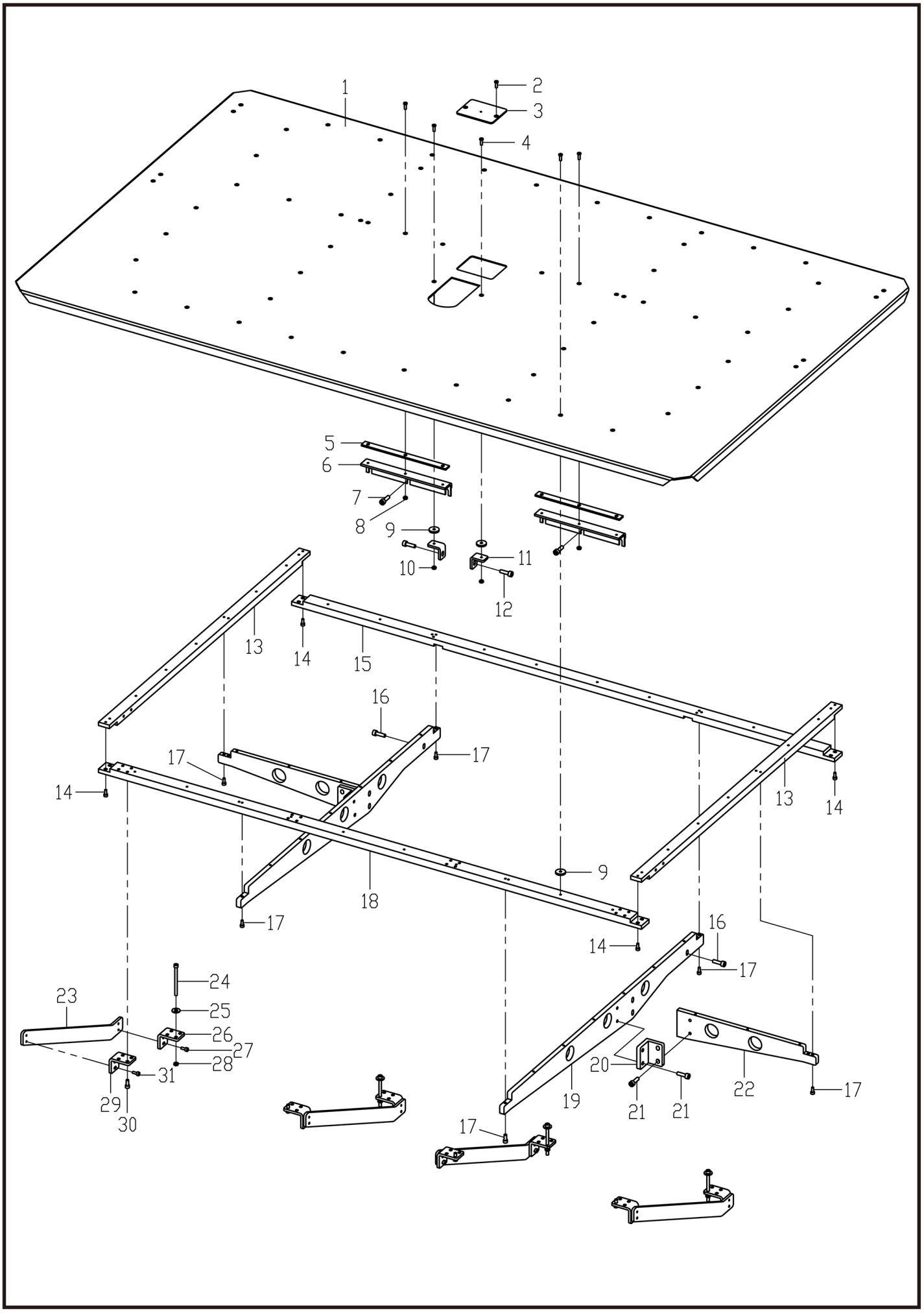

A3、补助板装置/Auxiliary plate mechanism

序号 No.	件号 Part.No.	参考件号 Ref.No.	零部件名称	NAME OF PARTS	数量 Amt.	备注
1	41712951	41712944	针板补助板A	AUXILIARY PLATE A	2	
2	417S15008	SA3538001	螺钉M4×8	SCREW M4×8	2	
3	41712512	401606	补助小板	SMALL AUXILIARY PLATE	1	
4	417S15003	S23849001	螺钉M4×12	SCREW M4×12	56	
5	41722305	SA8672001	补助板防震垫B	AUXILIARY PLATE CUSHION B	2	
6	41712312	SA8564001	补助板支架B	AUXILIARY PLATE BRACKET B	2	
7	417S30037	S42446001	螺栓M6×14	BOLT SOCKET M6×14	6	
8	407N01002	021400206	自锁螺母M4	NUT 2 M4	6	
9	41722010	SA4677101	补助板缓冲	AUXILIARY PLATE CUSHION	56	
10	41712023	SA4676101	补助板支架	AUXILIARY PLATE BRACKET	2	
11	407N01002	021400206	自锁螺母M4	NUT 2 M4	2	
12	417S30037	S42446001	螺栓M6×14	BOLT SOCKET M6×14	8	
13	401765	41712547	左右支撑条	SUPPORT STRIP	2	
14	417S30034	S55482001	螺栓（带垫圈）M4×14	BOLT SOCKET（S/P WASHER） M4×14	8	
15	401766	41712548	后支撑条	SUPPORT STRIP	1	
16	417S30304	S47269001	螺栓（带垫圈）M6×20	BOLT SOCKET（S/P WASHER）M6×20	6	
17	S05118	018401636	螺栓M4×16	BOLT SOCKET M4×16	10	
18	401764	41712516	补助板支架M	AUXILIARY PLATE BRACKET M	2	
19	302436	41712540	补助板支架	AUXILIARY PLATE BRACKET	2	
20	401763	41709550	补助板支架连接块	CONNECTING BLOCK	2	
21	417S30037	S42446001	螺栓M6×14	BOLT SOCKET M6×14	8	
22	302435	41712541	补助板支架延伸板	BRACKET EXTENDING BLOCK	2	
23	302438	41712545	辅助支撑条	AUXILIARY SUPPORT	4	
24	417S13500	S05165	螺栓M5×65	BOLT SOCKET M5×65	16	
25	41728004	SA4302001	垫圈	WASHER	16	
26	302437	41712546	支撑条L形连接	SUPPORT L CONNECTION	4	
27	417S30302	S55481001	螺栓（带垫圈）M4×12	SCREW PAN（S/P WASHER）M4×12	8	
28	N01017	021500216	六角螺母M5	NUT 2 M5	16	
29	302437	41712546	支撑条L形连接	SUPPORT L CONNECTION	4	
30	417S30306	S55485001	螺栓（带垫圈）M5×15	BOLT SOCKET（S/P WASHER） M5×15	16	
31	417S30302	S55481001	螺栓（带垫圈）M4×12	SCREW PAN（S/P WASHER）M4×12	8	

B . 上轴 · 针杆装置 / Upper shaft and needle bar mechanism

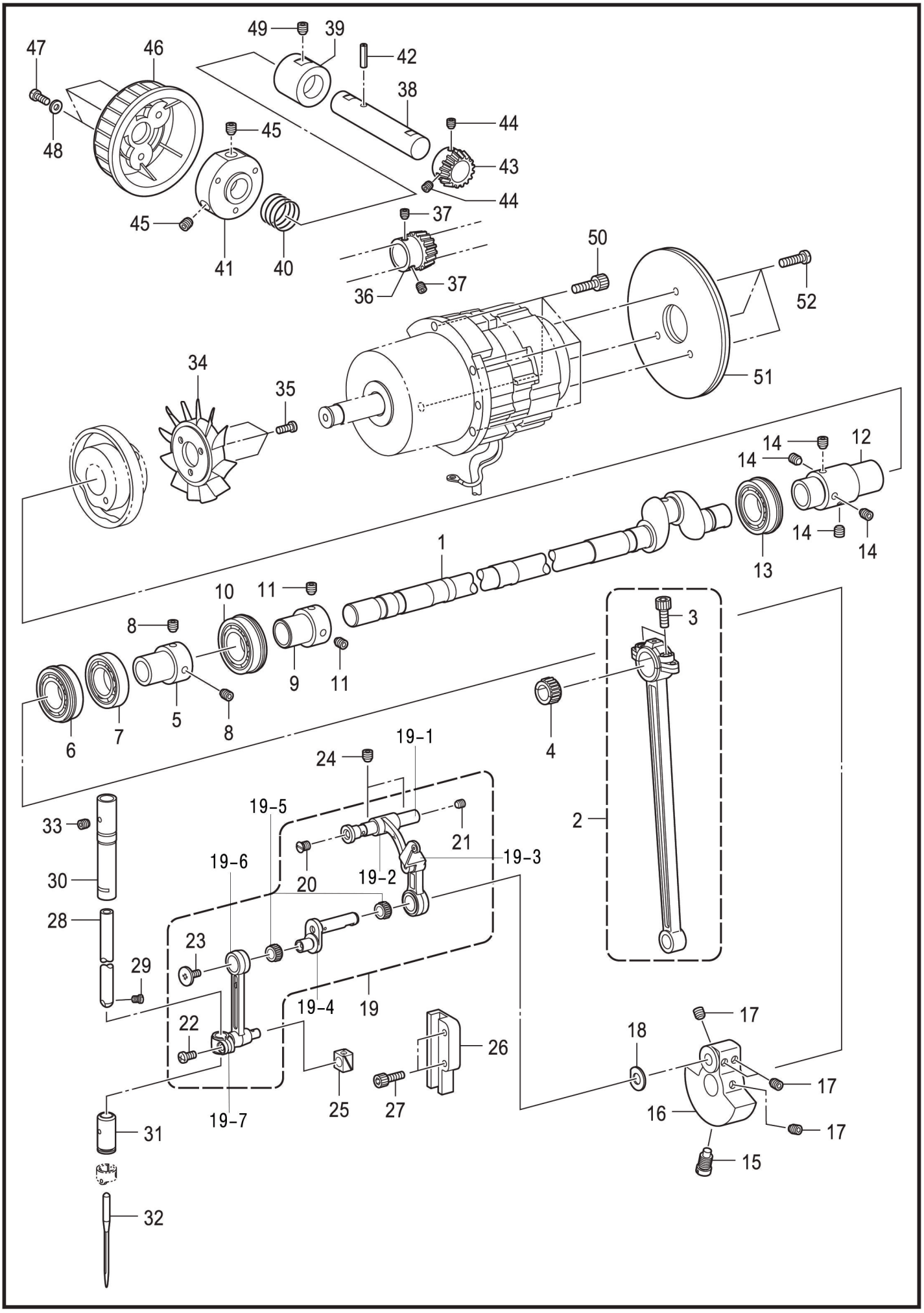

B、上轴·针杆装置/Upper shaft and needle bar mechanism

序号 No.	公司件号 Part No.	参考件号 Ref. No.	零部件名称	NAME OF PARTS	数量 Amt.	备注
1	41702303	SA8565101	上轴	UPPER SHUFT	1	
2	4170501100	SA3499001	曲柄轴组件	CRANK ROD ASSY	1	
3	S05124	018501636	螺栓M5×16	BOLT SOCKET M5×16	2	
4	41724001	SA4172001	滚针轴承K15×18×14	NEEDLE BEARING:BLUE	1	
4	41724001	SA4173001	滚针轴承K15×18×14	NEEDLE BEARING:BLACK	1	
4	41724001	SA4174001	滚针轴承K15×18×14	NEEDLE BEARING:GRAY	1	
4	41724001	SA4175001	滚针轴承K15×18×14	NEEDLE BEARING:YELLOW	1	
5	41703002	SA3206001	轴承套	BALL BEARING BUSH	1	
6	B10014	SA4179001	轴承6904DDUNR	BALL BEARING 6904DDUNR	1	
7	B06005	SA4180001	轴承R-6904DDU	BALL BEARING 6904DDU	1	
8	S10018	S23651001	固定螺钉M6×0.75-6	SET SCREW SOCKET(FT)M6×6	2	
9	41703002	SA3206001	轴承套	BALL BEARING BUSH	1	
10	B10012	SA4177001	轴承6004DDUNR	BALL BEARING 6004DDUNR	1	
11	S10018	S23651001	固定螺钉M6×0.75-6	SET SCREW SOCKET(FT)M6×6	2	
12	41703004	SA4608101	管接头G	JOINT G	1	
13	B10013	SA4178001	轴承6204DDUNR	BALL BEARING 6204DDUNR	1	
14	S10018	S23651001	固定螺钉M6×0.75-6	SET SCREW SOCKET(FT)M6×6	4	
15	417S30002	S25235001	螺钉M8	SCREW,M8	1	
16	41704001	SA4609101	针杆曲柄G	THREAD TAKE-UP CRANK G	1	
17	S10018	S23651001	固定螺钉M6×0.75-6	SET SCREW SOCKET(FT)M6×6	4	
18	41712133	110367001	垫圈8	WASHER,PLAIN SPECIAL 8	1	
19	4170501200	SA6182001	针杆连杆组件FK	THREAD TAKE-UP LEVER FK SET	1	
19-1	41726021		挑线架销	TAKE-UP RACK PIN	1	
19-2	41712103		挑线架	THREAD RACK	1	
19-3	4171210400		挑线杆组件	TAKE-UP ROD ASSEMBLY	1	
19-4	41712102		挑线曲柄	PICK CRANK	1	
19-5	41724003		滚针轴承K8×12×7.7	NEEDLE ROLLER BEARING K8×12×7.7	2	
19-6	41705101		针杆连杆	NEEDLE BAR LINKAGE	1	
19-7	41704100		针杆接头	NEEDLE BAR CONNECTOR	1	
20	417S17003	SA2958001	螺钉M5×6	SCREW FLAT M5×6	1	
21	S09019	012500536	螺钉M5×5	SET SCREW SOCKET(FT)M5×5	1	
22	S04078	062400816	螺钉M4×8	SCREW PAN M4×8	1	
23	417S14001	145465001	螺钉SM3.57-40×6L	SCREW SM3.57-40×6L	1	
24	S10019	012060636	螺钉M6×6	SET SCREW SOCKET(FT)M6×6	2	
25	41709001	142211001	滑块	SLIDE BLOCK	1	
26	41709002	SA3528001	滑块导向B	SLIDE BLOCK GUIDE	1	
27	S05118	018401636	螺栓M4×16	BOLT SOCKET M4×16	2	
28	41702002	SA4622001	针杆	NEEDLE BAR	1	
29	417S15002	144458001	螺钉SM3.57-40×4.5	SET SCREW,SM3.57-40×4.5	1	
30	41703005	SA4666001	针杆轴套UK	NEEDLE BAR BUSH UK	1	
31	41703006	SA3224001	针棒轴套D	NEEDLE BAR BUSH D	1	
32	40319006	145646019	机针DP×17<#19>	NEEDLE	1	
33	S09041	012060536	螺钉M6×5	SET SCREW SOCKET(FT)M5×5	1	
34	12411002	S38713100	叶轮	FAN	1	
35	S04078	062400816	螺钉M4×8	SCREW PAN M4×8	3	
36	40325010	SA6108001	齿轮R	PULLEY GEAR R	1	
37	S09019	012500536	螺钉M5×5	SET SCREW SOCKET(FT)M5×5	2	
38	41702003	SA4626101	上轮轴	PULLEY SHUFT	1	
39	41703007	SA4627001	上轮轴套	PULLEY BUSH	1	
40	41727001	SA4628001	上轮弹簧	PULLEY SPRING	1	
41	41703008	SA4629001	上轮基座	PULLEY BASE	1	
42	P03027	047401242	弹簧销4×16	PIN SPRING ROLL AW4	1	
43	41725002	SA4624001	齿轮	PULLEY GEARL	1	
44	S09019	012500536	螺栓M5×5	SET SCREW SOCKET(FT)M5×5	2	
45	S10018	S23651001	固定螺钉M6×0.75-6	SET SCREW SOCKET(FT)M6×6	2	
46	41711001	SA4630001	上轮	PULLEY	1	
47	S04079	062401006	螺钉M4×10	SCREW PAN M4×10	3	
48	41728024	SA5158001	垫圈L4	WASHER PLAIN L4	3	
49	S10019	012060636	螺钉M6×6	SET SCREW SOCKET(FT)M6×6	1	
50	S05124	018501636	螺栓M5×16	BOLT SOCKET M5×16	4	
51	41712011	SA5230001	惯性轮2	FRIES WHEEL 2	2	
52	417S30021	062401016	螺钉M4×10	SCREW PAN M4×10	3	

C1 . 送料装置 / Feed mechanism

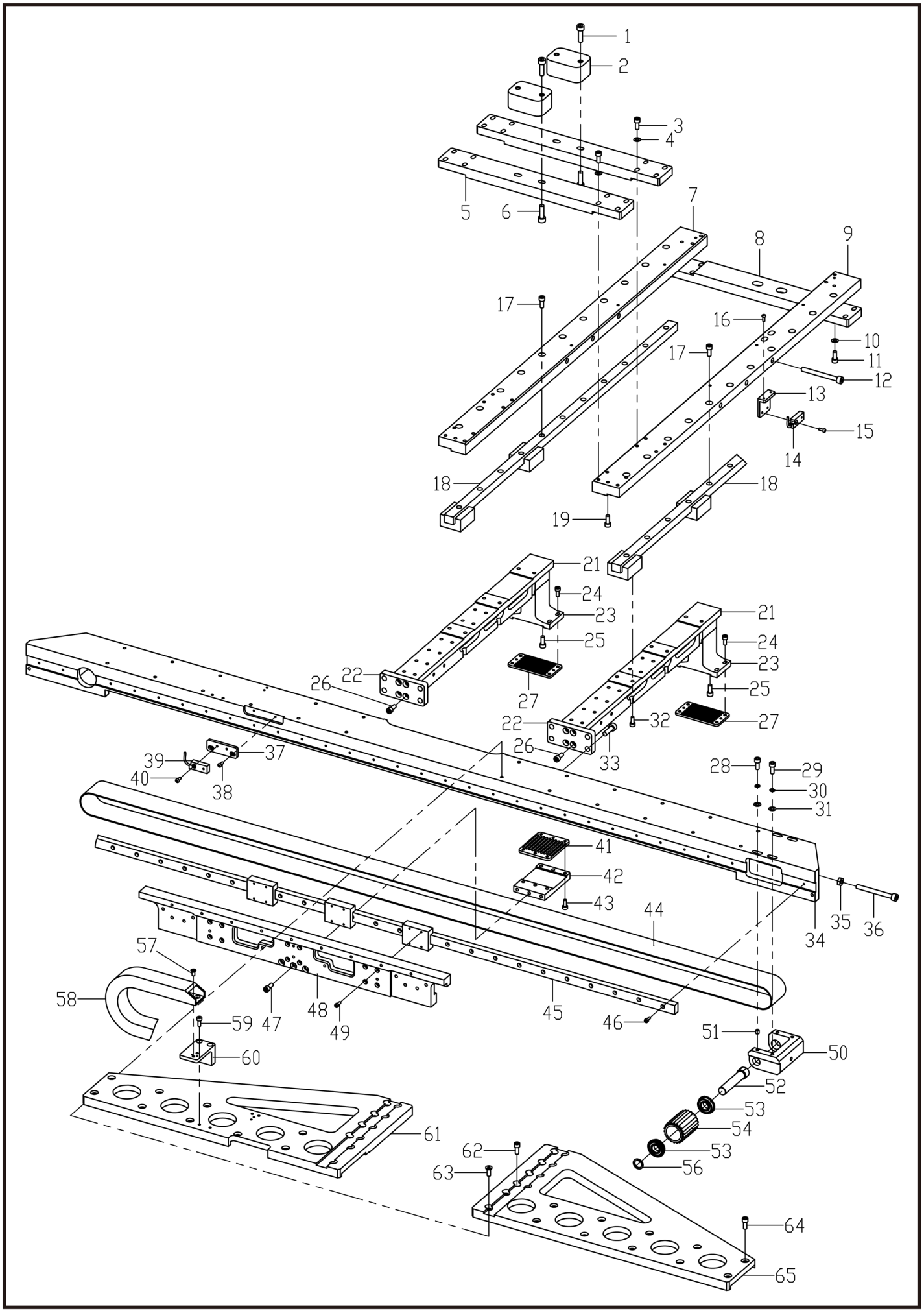

C1、送料装置/Feed mechanism

序号 No.	件号 Part.No.	参考件号 Ref.No.	零部件名称	NAME OF PARTS	数量 Amt.	备注
1	417S30304	S47269001	螺栓（带垫圈）M6×20	BOLT SOCKET（S/P WASHER）M6×20	4	
2	401748	41709538	导向连接块	GUIDE CONNECTING BLOCK	2	
3	S05035		螺栓M5×25	BOLT SOCKET M5×25	16	
4	41728028	146354002	垫圈5	WASHER PLAIN 5	16	
5	401749	41709526	横吊梁	THE CROSS HANGING BEAM	2	
6	417S30304	S47269001	螺栓（带垫圈）M6×20	BOLT SOCKET（S/P WASHER）M6×20	4	
7	401722	42209802	Y导向支座L	Y ORIENTED SUPPORTING L	1	
8	401749	41709526	横吊梁	THE CROSS HANGING BEAM	1	
9	401717	42209801	Y导向支座R	Y ORIENTED SUPPORTING R	1	
10	41728028	146354002	垫圈5	WASHER PLAIN 5	4	
11	S05068		螺栓M5×20	BOLT SOCKET M5×20	4	
12	S05112	018066036	螺栓M6×60	BOLT SOCKET M6×60	6	
13	401719	42212801	Y传感器支架	Y SENSOR BRACKET	1	
14	41730851	SA8521001	传感器	SENSOR	1	
15	S04076	062300816	螺钉M3×8	SCREW PAN M3×8	1	
16	417S30308	SA7293001	螺栓（带垫圈）M3×12	SCREW PAN（S/P WASHER）M3×12	2	
17	S05124	018501636	螺栓M5×16	BOLT SOCKET M5×16	2	
18	42224812		Y导轨	Y GUIDE	2	
19	S05121	018501036	螺栓M5×10	BOLT SOCKET M5×10	2	
21	401835	42209806	Y臂B	Y ARM B	2	
24	417S30034	S55482001	螺栓（带垫圈）M4×14	BOLT SOCKET（S/P WASHER） M4×14	8	
25	S05124	018501636	螺栓M5×16	BOLT SOCKET M5×16	8	
26	S05123	018501236	螺栓M5×12	BOLT SOCKET M5×12	8	
27	41712317	SA8590001	皮带支撑板	BELT HOLDER	2	
28	S05068		螺栓M5×20	BOLT SOCKET M5×20	2	
29	S05035		螺栓M5×25	BOLT SOCKET M5×25	2	
30	W02001	028050246	弹簧垫圈2-5	WASHER SPRING 2-5	4	
31	41728028	146354002	垫圈5	WASHER PLAIN 5	4	
32	S05118	018401636	螺栓M4×16	BOLT SOCKET M4×16	2	
33	417S30304	S47269001	螺栓（带垫圈）M6×20	BOLT SOCKET（S/P WASHER）M6×20	8	
34	401718	42209803	横梁	CROSSBEAM	1	
35	N01021	021060106	螺母M6	NUT 1 M6	2	
36	S05088	018066036	螺栓M6×45	BOLT SOCKET M6×45	1	
37	41709524		X传感器垫	Y SENSOR PAD	1	
38	S05094		螺栓M3×8	BOLT SOCKET M3×8	2	
39	41730851	SA8521001	传感器	SENSOR	1	
39	42230816		导线3C	CABLE 3C	1.5	
40	S04076	062300816	螺钉M3×8	SCREW PAN M3×8	2	
41	42212803	401607	皮带支撑板	BELT WORK CLAMP PLAE	1	
42	401720	42212802	皮带支架板	BELT SUPPORT PLAE	1	
43	S04078	062400816	螺栓M4×8	SCREW PAN M4×8	6	
44	42235811		X同步带	X BELT	1	
45	42224811		X导轨	X GUIDE	1	
46	S05114	018301436	螺栓M3×14	BOLT SOCKET M3×14	30	
47	S05124	018501636	螺栓M5×16	BOLT SOCKET M5×16	8	
48	401726	42209811	送料座	FEEDING SEAT	1	
49	S04076	062300816	螺钉M3×8	SCREW PAN M3×8	12	
50	401716	42201801	同步轮座	PULLEY BASE	1	
51	S09019	012500536	螺钉M5×5	SET SCREW SOCKET（FT）M5×5	2	
52	41702304	SA8582001	支点轴	PULLEY FULCRUM SHAFT	1	
53	B10017	SA1283001	球轴承6901ZZNR	BALL BEARING RADIAL 6202ZZNR	2	
54	4223580100		手轮A组件	PULLEY A ASSY	1	
56	41728301	SA8583001	支点轴套	PULLEY FULCRUM SHAFT COLLAR	1	

C1 . 送料装置 / Feed mechanism

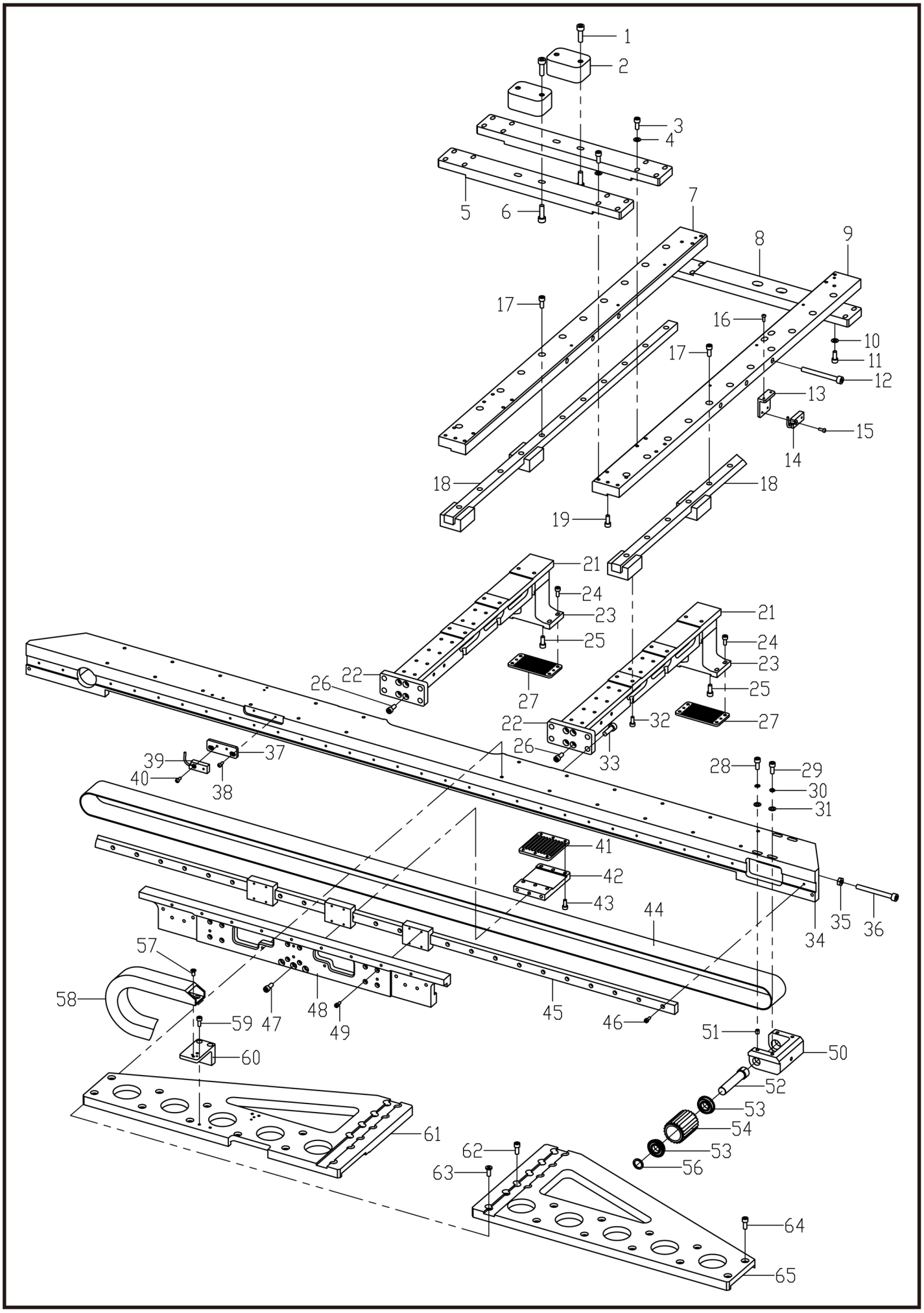

C1、送料装置/Feed mechanism

序号 No.	件号 Part.No.	参考件号 Ref.No.	零部件名称	NAME OF PARTS	数量 Amt.	备注
57	S02039	S25310101	螺钉M4	SCREW FLAT M4	2	
58	40711010		塑料拖链	TOWLINE	0	
59	S05118	018401636	螺栓M4×16	BOLT SOCKET M4×16	2	
60	401747	41712515	气管架安装座	PIPE RACK MOUNT	1	
61	401724	42212809	三角板L	RIVER PLATE L	1	
62	S05123	018501236	螺栓M5×12	BOLT SOCKET M5×12	16	
63	417S13301	SA8597001	螺栓M5×12	BOLT SOCKET M5×12	4	
64	S05123	018501236	螺栓M5×12	BOLT SOCKET M5×12	20	
65	401725	42212810	三角板R	RIVER PLATE R	1	

C2 . 送料装置 / Feed mechanism

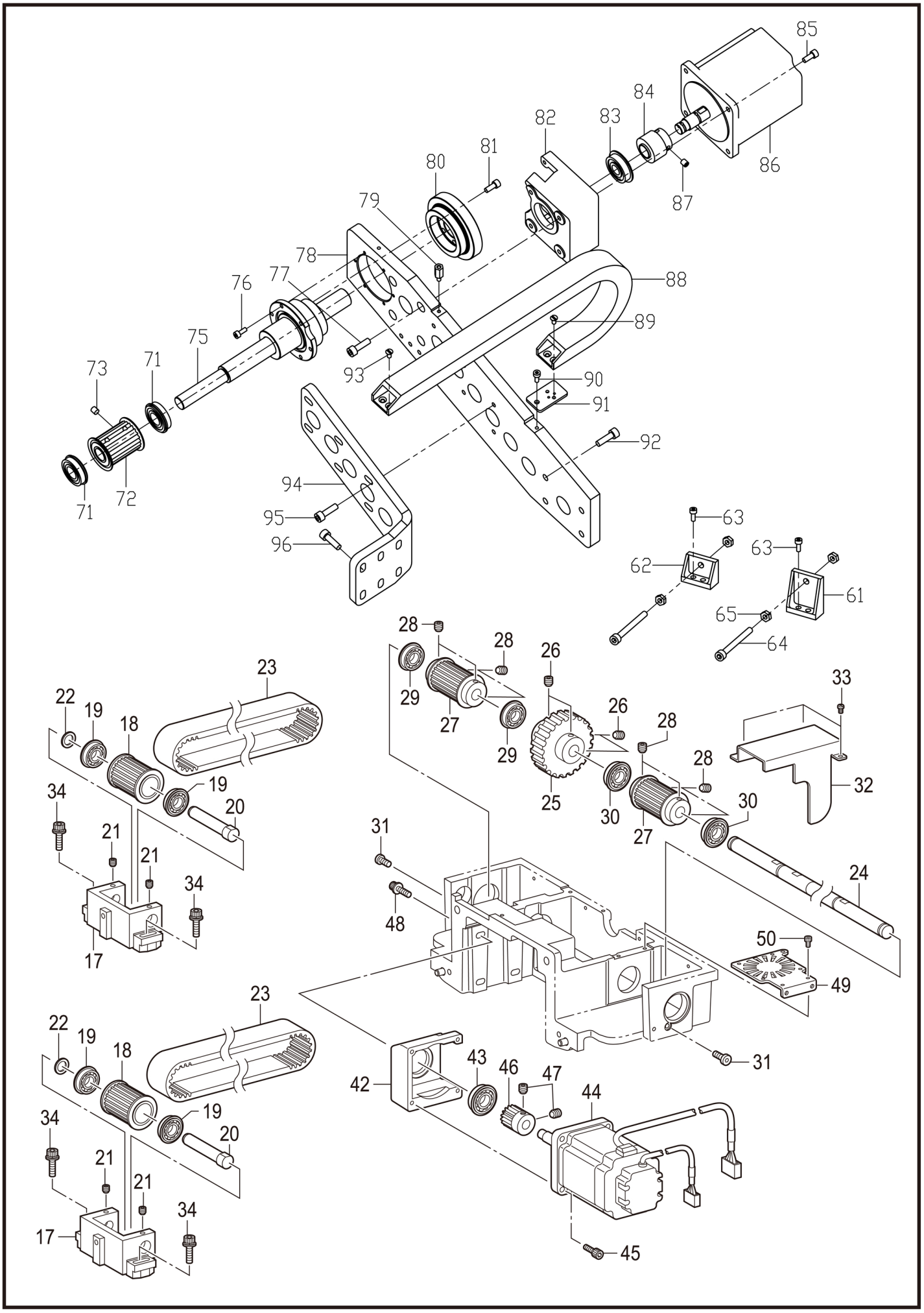

C2、送料装置/Feed mechanism

序号 No.	件号 Part.No.	参考件号 Ref.No.	零部件名称	NAME OF PARTS	数量 Amt.	备注
17	41706301	SA8592001	Y手轮基座	Y-PULLEY BRACKET	2	
18	4173530100	SA8579001	手轮组件A	PULLEY A ASSY	2	
19	B10017	SA1283001	球轴承6901ZZNR	BALL BEARING RADIAL 6202ZZNR	4	
20	41702304	SA8582001	手轮支点轴	PULLEY FULCRUM SHAFT	2	
21	S09019	012500536	螺钉M5×5	SET SCREW SOCKET（FT）M5×5	4	
22	41728301	SA8583001	支点轴套	PULLEY FULCRUM SHAFT COLLAR	2	
23	42235812		Y同步带5M1110	Y BELT	2	
24	41702306	SA8595001	Y驱动轴	DRIVE SHAFT Y	1	
25	41725302	SA8596001	Y齿轮	GEAR Y	1	
26	S10019	012060636	螺钉M6×6	SET SCREW SOCKET（FT）M6×6	4	
27	4173530400	SA8587001	手轮组件B	PULLEY B ASSY	2	
28	S10019	012060636	螺钉M6×6	SET SCREW SOCKET（FT）M6×6	8	
29	B10018	SA6674001	轴承6002ZZNR	BALL BEARING 6002ZZNR	2	
30	B10019	076202850	R轴承6202ZZNR	BALL BEARING RADIAL 6202ZZNR	2	
31	417S13301	SA8597001	螺栓M5×12	BOLT SOCKET M5×12	2	
32	41712324	SA8602001	Y齿轮罩	COVER GEAR Y	1	
33	S04078	062400816	螺钉M4×8	SCREW PAN M4×8	3	
34	417S30303	S47270001	螺栓（带垫圈）M6×30	BOLT SOCKET（S/P WASHER）M6×30	4	
42	301800	SA8598001	Y马达基座	MOTOR BRACKET Y	1	
43	B10020	SA8599001	轴承6201ZZNR	BALL BEARING 6201ZZNR	1	
44	41730303	SA8542001	脉冲马达组件XY	PULSE MOTOR ASSY XY	1	
45	S05124	018501636	螺栓M5×16	BOLT SOCKET M5×16	4	
46	41725304	SA8601001	Y马达齿轮	MOTOR GEAR Y	1	
47	S10019	012060636	螺钉M6×6	SET SCREW SOCKET（FT）M6×6	2	
48	417S30304	S47269001	螺栓（带垫圈）M6×20	BOLT SOCKET（S/P WASHER）M6×20	4	
49	41712325	SA8694001	风扇安装板	FAN BRACKET	2	
50	S05116	018400836	螺栓M4×8	BOLT SOCKET M4×8	4	
61	401833	41709529	皮带调节架A	THE BELT DAJUSTING FARME A	1	
62	401834	41709530	皮带调节架B	THE BELT DAJUSTING FARME B	1	
63	417S30034	S55482001	螺栓（带垫圈）M4×14	BOLT SOCKET（S/P WASHER） M4×14	4	
64	S05088	018066036	螺栓M6×45	BOLT SOCKET M6×45	2	
65	N01021	021060106	螺母M6	NUT 1 M6	4	
71	B10018	SA6674001	轴承6002ZZNR	BALL BEARING 6002ZZNR	2	
72	4223580200		左同步轮组件	LEFT PULLEY	1	
73	S10019	012060636	螺钉M6×6	SET SCREW SOCKET（FT）M6×6	4	
75	42224813		花键轴	SPLINE SHAFT	1	
76	S05133	018401236	螺栓M4×12	BOLT SOCKET M4×12	6	
77	417S30304	S47269001	螺栓（带垫圈）M6×20	BOLT SOCKET（S/P WASHER）M6×20	4	
78	401608	42212804	X向安装座	X DIRECTING MOUNTING SEAT	1	
79	422S30802		外六角螺钉	SCREW	1	
80	41725540		X大齿轮	X GEAR	1	
81	S05123	018501236	螺栓M5×12	BOLT SOCKET M5×12	6	
82	401750	41701532	X马达基座	MOTOR BRACKET X	1	
83	B10020	SA8599001	轴承6201ZZNR	BALL BEARING 6201ZZNR	1	
84	41725304	SA8601001	Y马达齿轮	MOTOR GEAR Y	1	
85	S05124	018501636	螺栓M5×16	BOLT SOCKET M5×16	4	
86	41730303	SA8542001	脉冲马达组件	PULSE MOTOR ASSY Y	1	
87	S10019	012060636	螺钉M6×6	SET SCREW SOCKET（FT）M6×6	2	
88	40711010		塑料拖链	TOWLINE	2	
89	S02039	S25310101	螺钉M4	SCREW FLAT M4	2	
90	417S30302	S55481001	螺栓（带垫圈）M4×12	SCREW PAN（S/P WASHER）M4×12	1	
91	41712513		气管架小安装板	PIPE RACK INSTALLATION PLATE	1	
92	417S30304	S47269001	螺栓（带垫圈）M6×20	BOLT SOCKET（S/P WASHER）M6×20	4	

C2 . 送料装置 / Feed mechanism

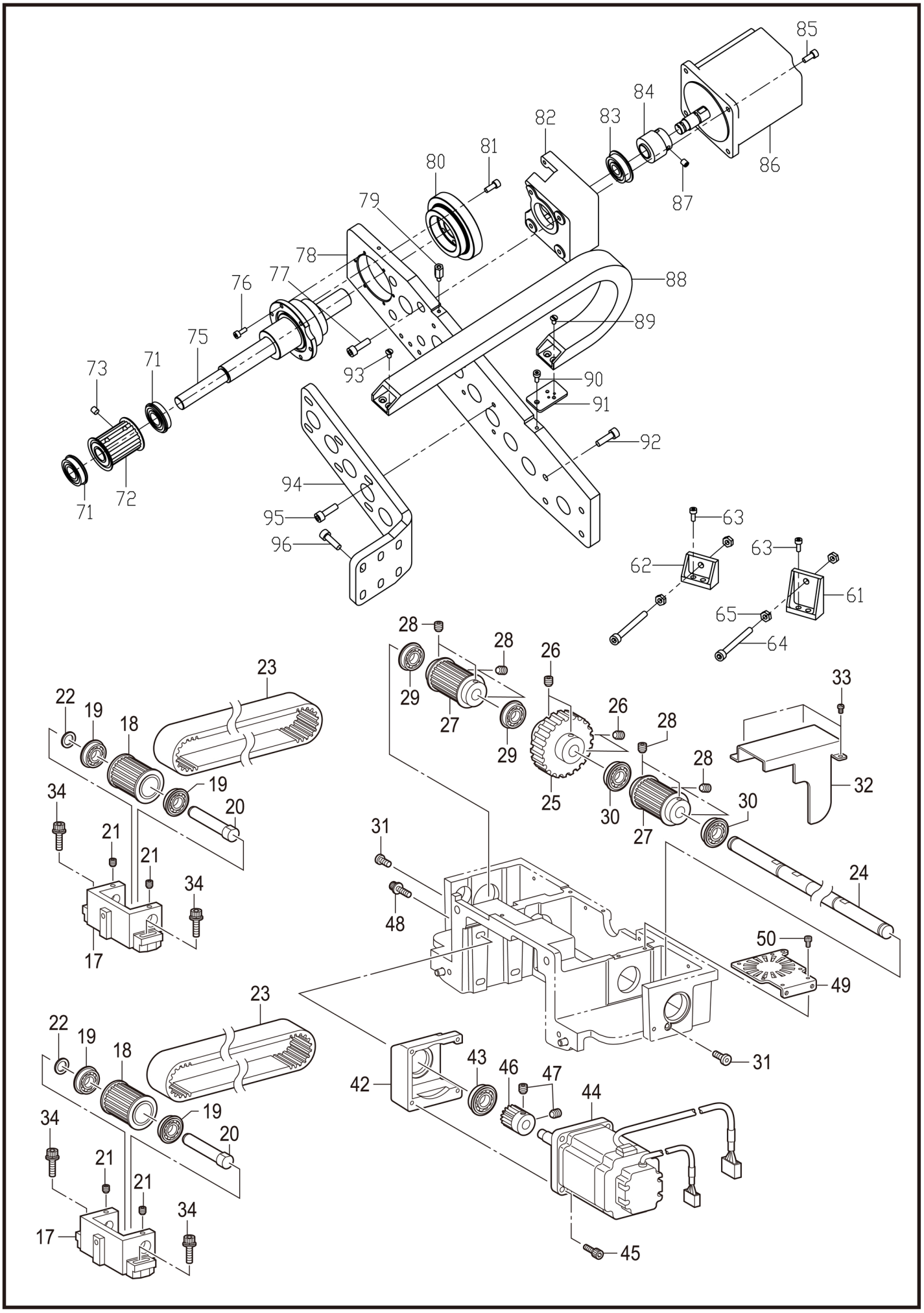

C2、送料装置/Feed mechanism

序号 No.	件号 Part.No.	参考件号 Ref.No.	零部件名称	NAME OF PARTS	数量 Amt.	备注
93	S02039	S25310101	螺钉M4	SCREW FLAT M4	2	
94	401609	42212805	加固板	MENDING PLATE	1	
95	417S30304	S47269001	螺栓（带垫圈）M6×20	BOLT SOCKET（S/P WASHER）M6×20	6	
96	417S30304	S47269001	螺栓（带垫圈）M6×20	BOLT SOCKET（S/P WASHER）M6×20	6	

C3 . 夹具装置 / Clamp mechanism

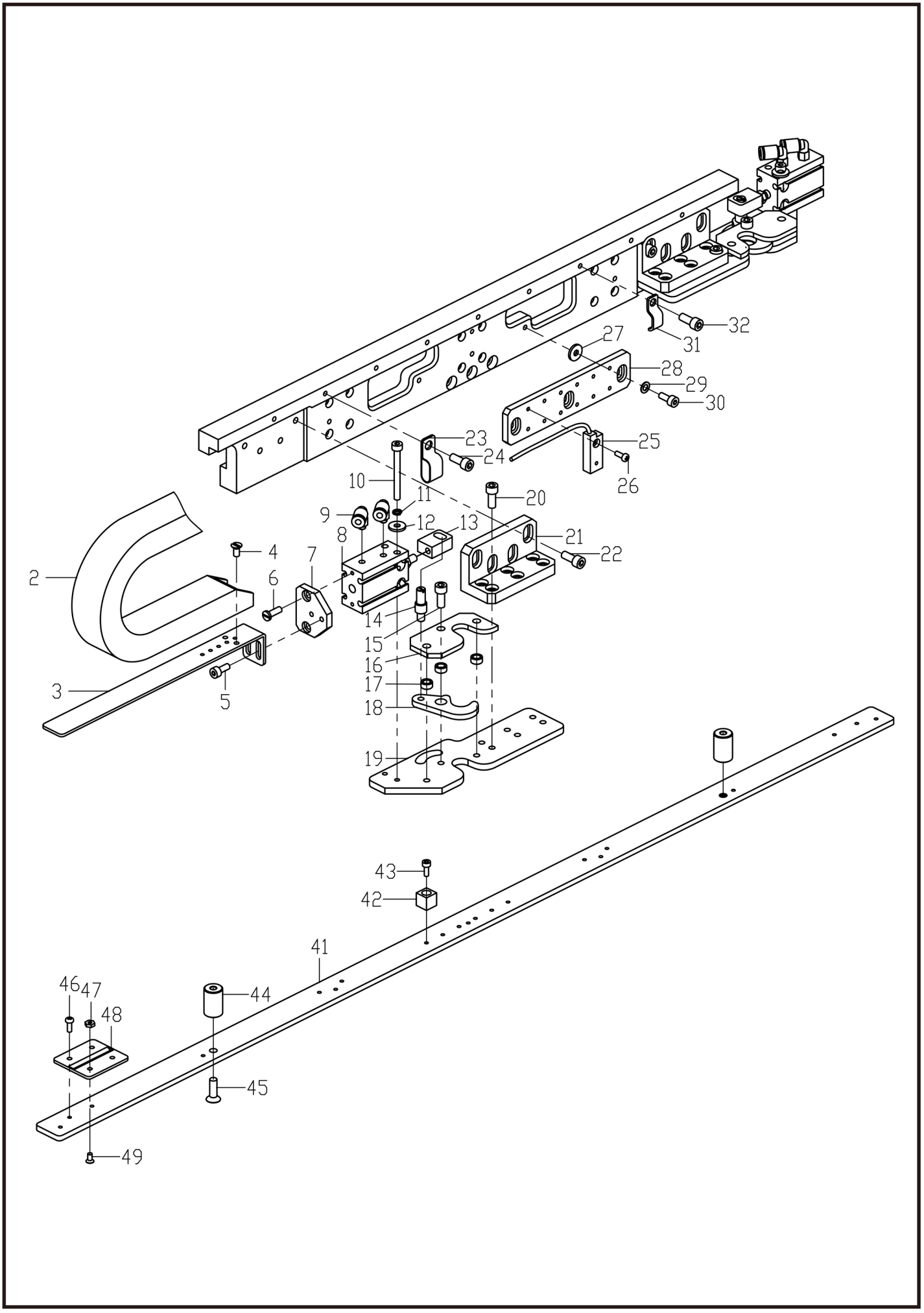

C3、夹具装置/Clamp mechanism

序号 No.	件号 Part.No.	参考件号 Ref.No.	零部件名称	NAME OF PARTS	数量 Amt.	备注
2	40711010		塑料拖链	TOWLINE	2	
3	42212815	401613	拖链固定支架	TOWLINE FIXATIONG	1	
4	S02039	S25310101	螺钉M4	SCREW FLAT M4	2	
5	S05116	018400836	螺栓M4×8	BOLT SOCKET M4×8	2	
6	417S15008	SA3538001	螺钉M4×8	SCREW, M4×8	2	
7	401729	42209814	拖链支架安装板	TOWLINE BRACKET MOUNTING PLATE	1	
8	41730441		气缸CU16-15D	AIR CYLINDER CU16-15D	2	
9	41736003		气管接头	GAS POPE JOINT	4	
10	S05065		螺栓M4×40	BOLT SOCKET M4×40	4	
11	W02008	028040246	弹簧垫圈2-4	WASHER SPRING 2-4	4	
12	41728024	SA5158001	垫圈L4	WASHER PLAIN L4	4	
13	401727	42209812	接头	CONNECT JOIN	2	
14	42226811		接头销	JOIN PIIN	2	
15	S05123	018501236	螺栓M5×12	BOLT SOCKET M5×12	6	
16	42212812	401611	夹紧杆挡板	CLAMPING ROD BAFFLE	2	
17	42228811		转动垫圈	ROTARY WASHER	6	
18	42212813	401613	夹紧杆	CLAMP BAR	2	
19	42212811	401610	夹具安装板	FIXTURE MOUNTING PLATE	2	
20	S05121	018501036	螺栓M5×10	BOLT SOCKET M5×10	12	
21	401728	42209813	夹具联接板	CLAMP THE CONNECTING PLATE	2	
22	S05123	018501236	螺栓M5×12	BOLT SOCKET M5×12	8	
23	41312089		线夹	CODE HOLDER	1	
24	S05121	018501036	螺栓M5×10	BOLT SOCKET M5×10	1	
25	41730851		传感器	SENSOR	5	
25	42230816		导线3C	CABLE 3C	2.5	
25	62800011		导线6C	CABLE 6C	5	
26	S04076	062300816	螺钉M3×8	SCREW PAN M3×8	5	
27	41728024	SA5158001	垫圈L4	WASHER PLAIN L4	2	
28	401732	42209815	传感器安装板	SENSOR MOUNTING PLATE	1	
29	W01001	025040236	垫圈4	WASHER PLAIN M4	2	
30	S05010	018401236	螺栓M4×12	BOLT SOCKET M4×12	2	
31	12912327		电线固定夹	WIRE CLIP	1	
32	S05121	018501036	螺栓M5×10	BOLT SOCKET M5×10	1	
41	42212800	401661	模板固定板	TEMPLATE FIXED PLATE	8	
42	401662	42209836	感应块	INDUCTION BLOCK	10	
43	S05052		螺栓M3×10	BOLT SOCKET M3×10	10	
44	42226812		夹紧销	CLAMPING PIN	20	
45	S17852		内六角沉头螺钉M5×15	SCREW PAN M5×15	20	

D1 . 抬压装置 / Work clamp lifter mechanism

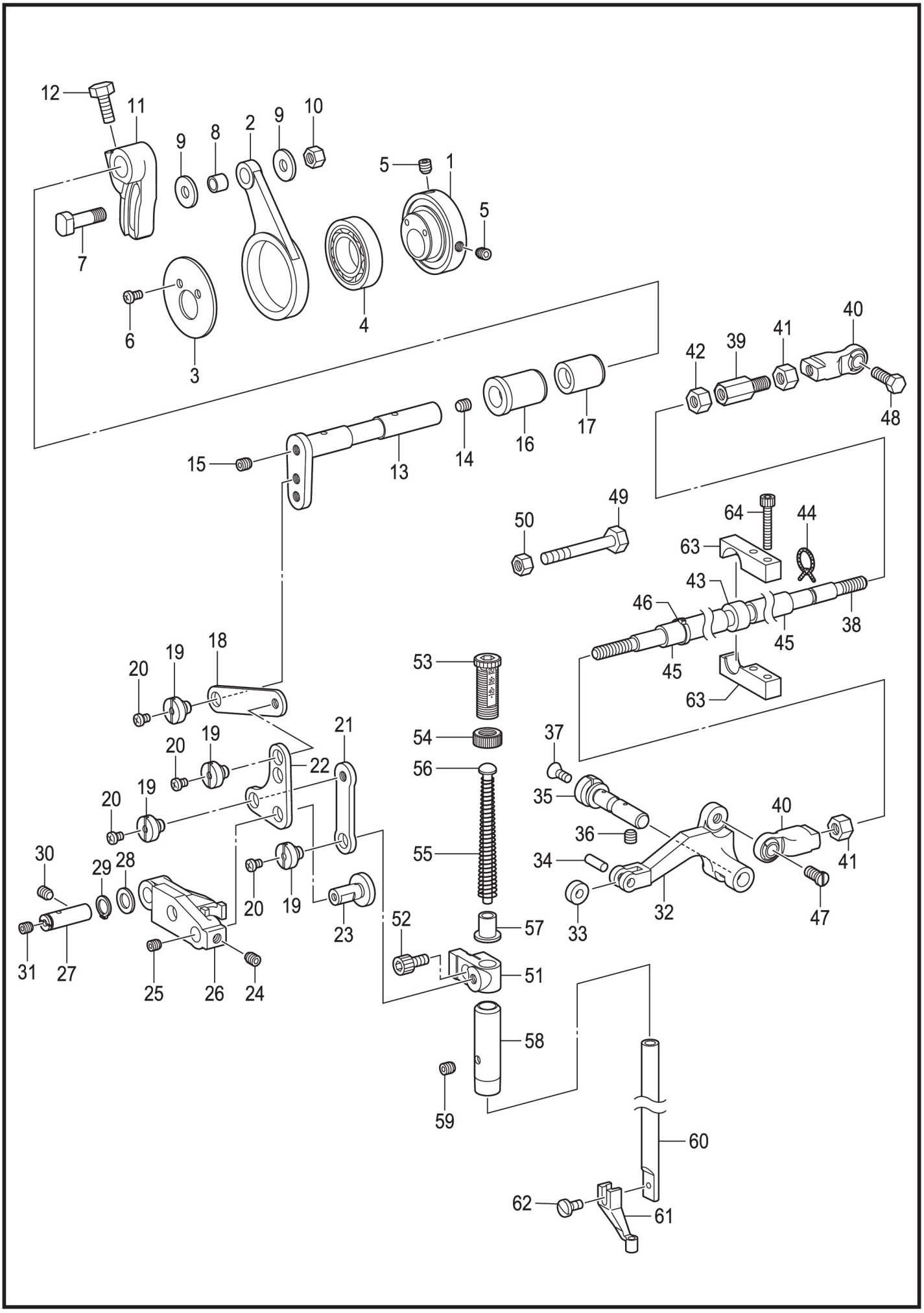

D1、抬压脚装置/Work clamp lifter mechanism

序号 No.	件号 Part.No.	参考件号 Ref.No.	零部件名称	NAME OF PARTS	数量 Amt.	备注
1	41710001	SA4759001	凸轮	STEPPING CLAMP CAM	1	
2	41705001	SA4760001	连杆	STEPPINGCLAMP CON.ROD	1	
3	41728003	SA4763001	垫圈	WASHER STEPPING CLAMP CAM	1	
4	B06008	623033000	轴承6805VV	BALL BEARING 6805VV	1	
5	S10018	S23651001	固定螺钉M6×0.75-6	SET SCREW SOCKET(FT)M6×6	2	
6	S04035	062400616	螺钉M4×6	SCREW PAN M4×6	2	
7	41726003	SA4761001	滚轮轴	ROLLER SHAFT STEPPING CLAMP	1	
8	41703010	SA4762001	滚轮	ROLLER STEPPING CLAMP	1	
9	41728004	SA4302001	垫圈	WASHER	2	
10	N01021	021060106	螺母M6	NUT 1 M6	1	
11	400682	SA4764001	压臂R	STEPPING CLAMP ARM R	1	
12	L02032	017061213	螺栓M6×12	BOLT M6×12	1	
13	400686	SA4765001	压臂F	STEPPING CLAMP ARM F	1	
14	S10019	012060636	螺钉M6×6	SET SCREW SOCKET(FT)M6×6	1	
15	S10018	S23651001	固定螺钉M6×0.75-6	SET SCREW SOCKET(FT)M6×6	1	
16	41703011	SA4766001	压臂轴套F	BUSH STEPPING CLAMP F	1	
17	41703012	SA4767001	压臂轴套R	BUSH STEPPING CLAMP R	1	
18	41712053	SA4768001	间歇连杆A	STEPPING CLAMP LINK A	1	
19	417S30007	SA4769101	段螺钉6	SHOULDER SCREW 6	4	
20	S04036	062300416	螺钉M3×4	SCREW PAN M3×4	4	
21	41712054	SA4770001	间歇连杆B	STEPPING CLAMP LINK B	1	
22	41712055	SA4772001	间歇联杆	STEPPING CLAMP LINK	1	
23	41726004	SA4773001	联杆轴	SHAFT STEPPING CLAMP LINK	1	
24	S10019	012060636	螺钉M6×6	SET SCREW SOCKET(FT)M6×6	1	
25	S09006	012400436	螺钉M4×4	SET SCREW SOCKET(FT)M4×4	1	
26	400684	SA4777001	联接板	STEPPING CLAMP LIFTER LINK	1	
27	41702014	SA4771001	联接板轴	SHAFT STEPPING CLAMP LIFTER LINK	1	
28	41728031	SA2161001	垫圈	WASHER	1	
29	H03006	048080142	轴用挡圈C8	RETAINING RING EXTERNAL C8	1	
30	S10019	012060636	螺钉M6×6	SET SCREW SOCKET(FT)M6×6	1	
31	S09006	012400436	螺钉M4×4	SET SCREW SOCKET(FT)M4×4	1	
32	41709019	SA4779001	间歇提升杆	STEPPING CLAMP LIFTER	1	
33	41703013	SA4781001	提升杆滑轮	ROLLER STEPPING CLAMP LIFTER	1	
34	41726005	141362001	滚轮轴	ROLLER	1	
35	41702015	SA4780001	提升杆轴	SHAFT STEPPING CLAMP LIFTER	1	
36	S10019	012060636	螺钉M6×6	SET SCREW SOCKET(FT)M6×6	1	
37	S02039	S25310101	螺钉M4	SCREW FLAT M4	1	
38	41705302	SA8683001	间歇提升连杆	STEPPING CLAMP LIFTER ROD	1	
39	417S12003	SA4853001	提升连杆接头	JOINT STEPPING CLAMP LIFTER	1	
40	4170530300	SA8684001	球接头组件	BALL JOINT ASSY	2	
41	N01012	021060306	六角螺母 M6	NUT 3 M6	2	
42	417S16001	SA3227001	螺母M6×0.75	NUT(FT)M6	2	
43	41711313	SA8688001	橡皮管套	RUBBER BUSH	1	
44	41723014	SA6572001	油线L=140	WICK L=140	1	
45	41722315	SA8912001	橡皮管	RUBBER TUBE	2	
46	11211005	S04159000	线夹1M	BAND 1M	1	
47	417S11301	SA8689001	螺钉M6×12	SCREW M6×12	1	
48	L02039	017061612	六角螺栓 M6×12	BOLT M6×16	1	
49	L01007	017065002	螺栓M6×50	BOLT M6×50	1	
50	N01021	021060106	螺母M6	NUT 1 M6	1	
51	41709020	SA4778001	压紧杆接头	PRESSER BAR CLAMP	1	
52	S05116	018400836	螺栓M4×8	BOLT SOCKET M4×8	1	
53	129S30003	SA1174001	调节螺栓M14	PESSER ADJUSTING SCREW M14	1	
54	129S16001	SA1175001	调节螺母M14	ADJUST SCREW NUT	1	
55	41727004	SA5300001	弹簧	PRESSER BAR SPRING	1	

D1 . 抬压装置 / Work clamp lifter mechanism

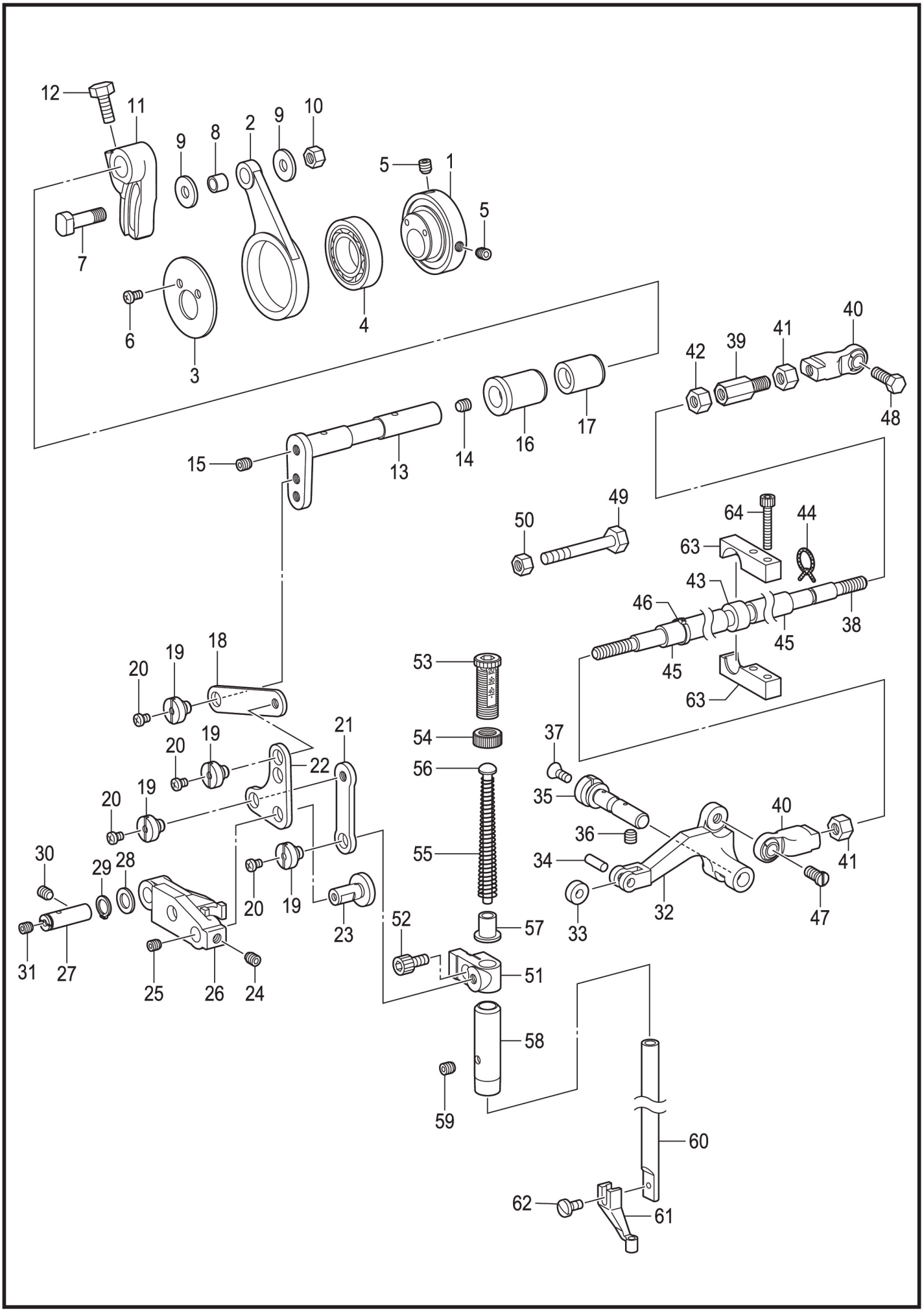

D1、抬压脚装置/Work clamp lifter mechanism

序号 No.	件号 Part.No.	参考件号 Ref.No.	零部件名称	NAME OF PARTS	数量 Amt.	备注
56	41702017	S10112101	弹簧导向	PRESSER BAR SPRING GUIDE	1	
57	41703014	SA5301001	弹簧管套	COLLAR PRESSER BAR SPRING	1	
58	41703015	SA2195001	压紧杆轴套	PRESSER BAR BUSH	1	
59	S09041	012060536	螺钉M6×5	SET SCREW SOCKET(FT)M6×5	1	
60	41702018	111466121	压紧杆	PRESSER BAR	1	
61	41716001	S42843001	压脚	WORK CLAMP	1	
62	417S15011	S13399001	螺钉SM3.57×12	SCREW SM3.57×12	1	
63	41709309	SA8690001	间歇提升连杆支架	HOLDER STEP-CLAMP LIFTER TOD	2	
64	S05063	018402536	螺栓M4×25	BOLT SOCKET M4×25	2	

D2 . 抬压装置 / Work clamp lifter mechanism

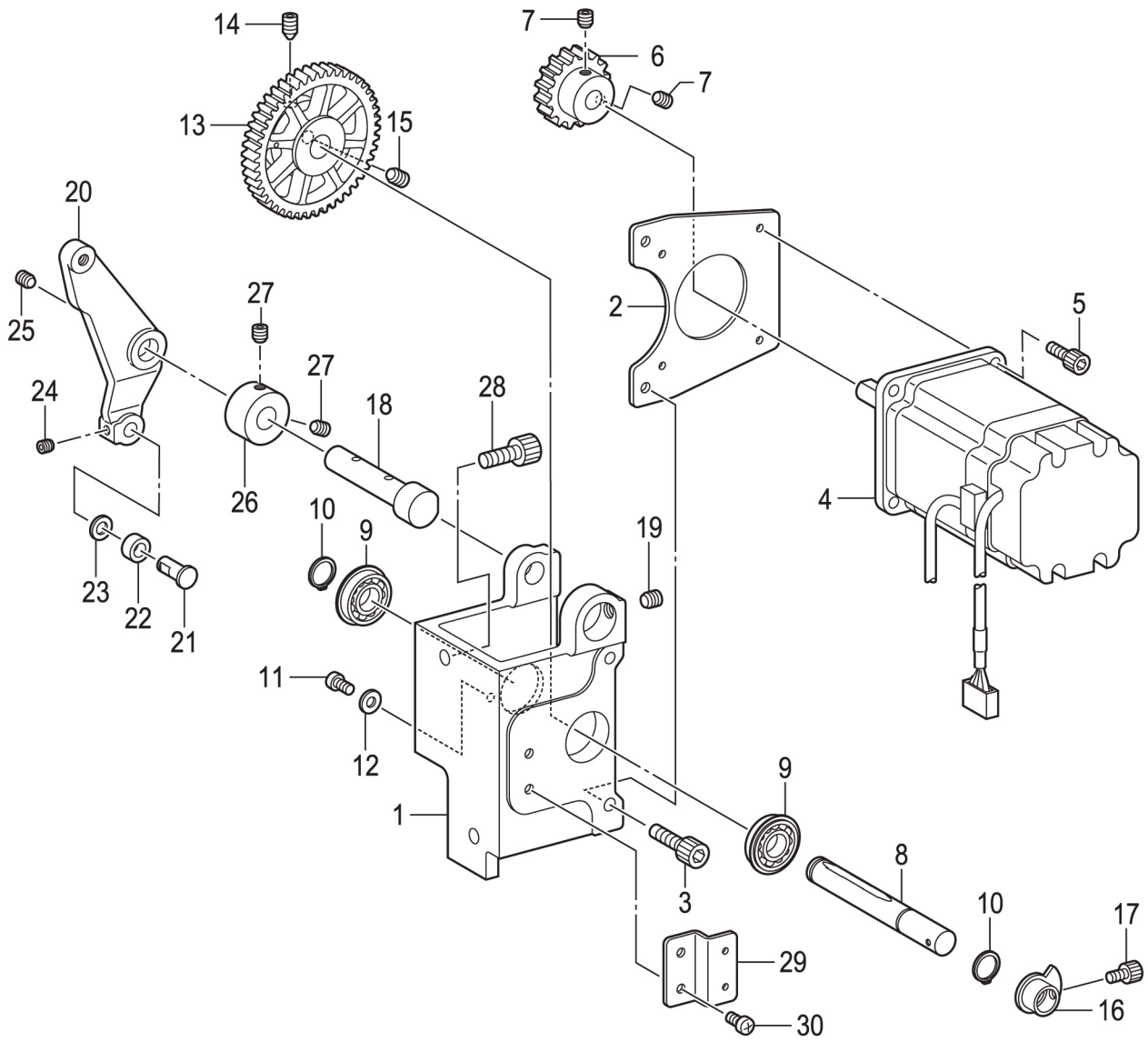

D2、抬压装置/Work clamp lifter mechanism

序号 No.	公司件号 Part No.	参考件号 Ref.No.	零部件名称	NAME OF PARTS	数量 Amt.	备注
1	41701008	SA4741101	马达座	MOTOR BRACKET	1	
2	41712063	SA4742001	压脚马达板	WORK CLAMP MOTOR PLATE	1	
3	S05121	018501036	螺栓M5×10	BOLT SOCKET M5×10	2	
4	41730043	SA4826201	脉冲马达组件P	PULSE MOTOR ASSY P	1	
5	S05133	018401036	螺钉M4×12	BOLT SOCKET M4×10	4	
6	41725009	SA4743001	驱动齿轮	WORK CLAMP DRIVING GEAR	1	
7	S10019	012060636	螺钉M6×6	SET SCREW SOCKET(FT)M6×6	2	
8	41702020	SA4744001	压脚支点轴	WORK CLAMP FULCRUM SHAFT	1	
9	B10015	SA4647001	球轴承6900ZZNR	BALL BEARING 6900ZZNR	2	
10	H03008	048100142	挡圈10	RETAINING RING EXTERNAL C10	2	
11	S04035	062400616	螺钉M4×6	SCREW PAN M4×6	1	
12	W01001	025040236	垫圈4	WASHER PLAIN M4	1	
13	41725010	SA4745001	凸轮齿轮	WORK CLAMP CAM GEAR	1	
14	S10021	016061031	螺钉M6×10	SET SCREW SOCKET(CN)M6×10	1	
15	S10019	012060636	螺钉M6×6	SET SCREW SOCKET(FT)M6×6	1	
16	4170301700	SA4747001	压脚原点挡块	WORK CLAMP H-POSITION DOG	1	
17	S05115	018400636	螺栓M4×6	BOLT SOCKET M4×6	1	
18	41702025	SA4748001	压脚柄轴	WORK CLAMP LEVER SHAFT	1	
19	S10019	012060636	螺钉M6×6	SET SCREW SOCKET(FT)M6×6	1	
20	41709023	SA6210001	间歇驱动杆	STEPPING W-CLAMP DRIVING LEVER	1	
21	41702022	SA3441001	抬压滚轮轴	W-CLAMP LIFTER ROLLER SHAFT	1	
22	B04026	070696800	轴承轴承R-696ZZ	BALL BEARING RADIAL 696ZZ	1	
23	41728005	109763003	垫圈	WASHER	1	
24	S09019	012500536	螺钉M5×5	SET SCREW SOCKET(FT)M5×5	1	
25	S10019	012060636	螺钉M6×6	SET SCREW SOCKET(FT)M6×6	1	
26	41708302	SA4757001	紧圈	SET SCREW COLLAR	1	
27	S10019	012060636	螺钉M6×6	SET SCREW SOCKET(FT)M6×6	2	
28	S05110	018061236	螺栓M6×12	BOLT SOCKET M6×12	2	
29	41712062	SA4753001	压脚传感器板	WORK CLAMP SENSOR PLATE	1	
30	S04035	062400616	螺钉M4×6	SCREW PAN M4×6	2	

E . 下轴装置 / Lower shaft mechanism

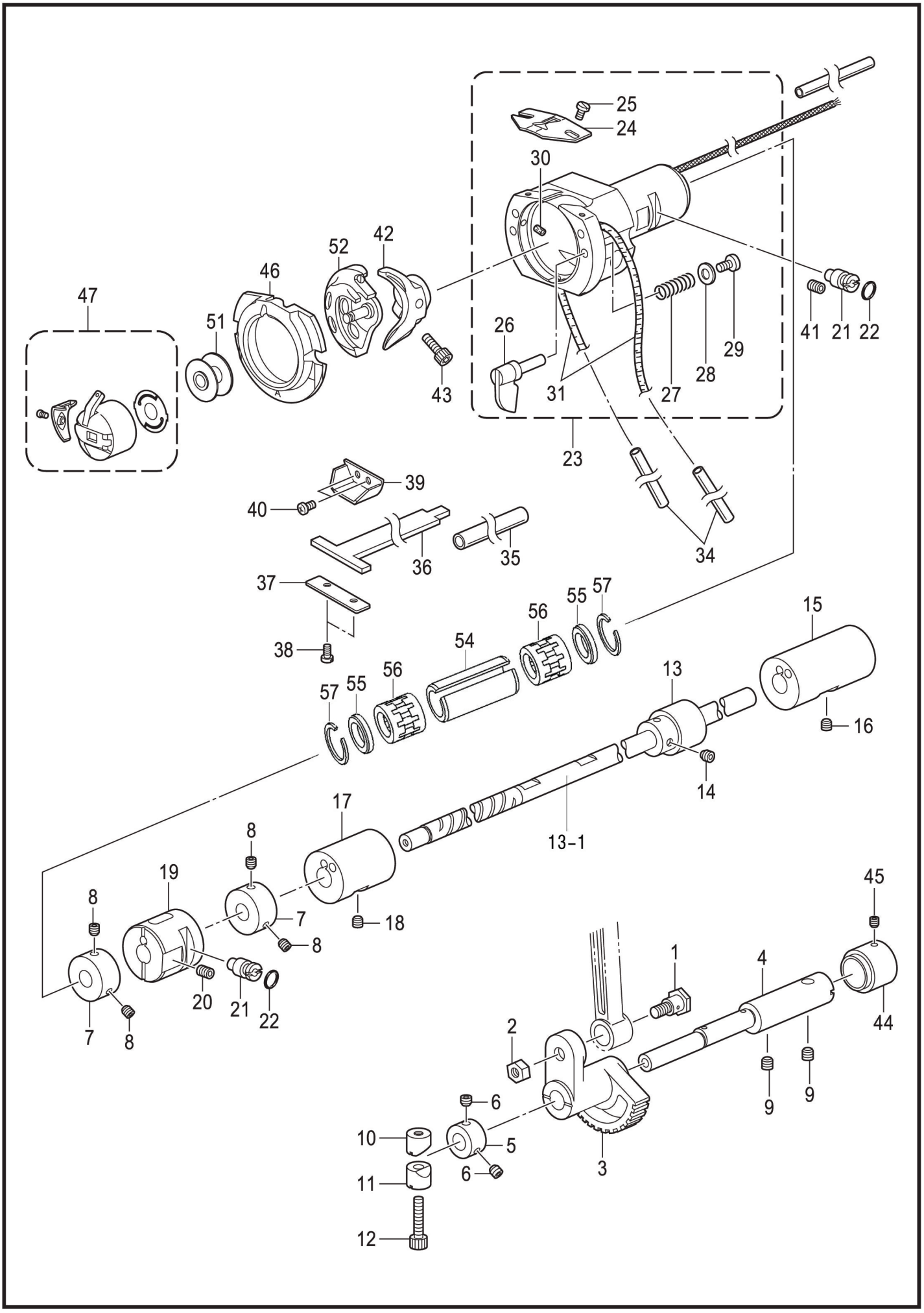

E、下轴装置/Lower shaft mechanism

序号 No.	件号 Part.No.	参考件号 Ref.No.	零部件名称	NAME OF PARTS	数量 Amt.	备注
1	417S30011	SA3226001	段螺钉	SHOULDER SCREW	1	
2	417S16001	SA3227001	螺母M6×0.75	NUT(FT)M6	1	
3	41725011	SA3228101	摆动齿轮	ROCK GEAR	1	
4	41702027	SA4782001	摆动齿轮轴	ROCK GEAR SHAFT	1	
5	41708002	SA3231001	紧圈B	SET SCREW COLLAR B	1	
6	S09041	012060536	螺钉M6×5	SET SCREW SOCKET(FT)M6×5	2	
7	41708305	SA8695001	紧圈	SET SCREW COLLAR	2	
8	S10018	S23651001	固定螺钉M6×0.75-6	SET SCREW SOCKET(FT)M6×6	4	
9	S10019	012060636	螺钉M6×6	SET SCREW SOCKET(FT)M6×6	2	
10	41708303	SA8696001	紧固套管A	PINCH SLEEVE A	1	
11	41708304	SA8697001	紧固套管B	PINCH SLEEVE B	1	
12	S05119	018402036	螺栓M4×20	BOLT SOCKET M4×20	1	
13	41725305		下轴齿轮	LOWER SHAFT GEAR	1	
13-1	41702310		下轴	LOWER SHAFT	1	
14	S09019	012500536	螺钉M5×5	SET SCREW SOCKET(FT)M5×5	1	
15	41703302	SA8701001	下轴轴套	LOWER SHAFT BUSH	1	
16	S10019	012060636	螺钉M6×6	SET SCREW SOCKET(FT)M6×6	1	
17	41703303	SA8702001	下轴中轴套	LOWER SHAFT M-BUSH	1	
18	S10019	012060636	螺钉M6×6	SET SCREW SOCKET(FT)M6×6	1	
19	41703304	SA8703001	下轴调整轴套	LOWER SHAFT A-BUSH	1	
20	S10024	012061036	螺钉M6×10	SET SCREW SOCKET(FT)M6×10	1	
21	41702029	SA3238101	旋梭调节轴	ADJUSTING STUD	2	
22	41722015	081003670	O形圈PW3	O RING PW3	2	
23	41701009	SA8705001	梭床	SHUTTLE RACE BASE ASSY G	1	
24	41712190	S02429201	旋梭线导向	SHUTTLE RACE THREAD GUIDE	1	
25	417S15007	SA4199001	螺钉M3×4	SCREW M3×4	2	
26	4172601500	SA3241001	大旋梭固定柄	S-RACE BASE SETTING CLAW	2	
27	41727006	152684101	弹簧	COMPRESSION SPRING	2	
28	W01002	026030136	垫圈M3	WASHER PLAIN M3	2	
29	S04082	062300616	螺钉M3×6	SCREW PAN M3×6	2	
30	41723013	153050000	油毡	S-RACE BASE FELT	2	
31	41723025	SA8707001	油毡	FELT	2	
32	12923019	SA9004001	油管6×6	WICK M6×6	1	
33	12921005	SA8710001	油管Φ4×Φ6	OIL TUBE Φ4×Φ6	1	
34	12921002	SA8710001	油管Φ4×Φ6	OIL TUBE Φ4×Φ6	2	
35	12921002	SA8711001	油管Φ4×Φ6	OIL TUBE Φ4×Φ6	1	
36	4172302100	SA6260001	油毡组件	FELT ASSY	1	
37	41712075	SA3242001	油毡支架	FELT HOLDER	1	
38	417S15009	S44924001	固定螺钉 M3×5.5	SCREW M3×5.5	2	
39	41711012	SA3274101	油毡支架	FELT HOLDER	1	
40	417S15010	S47307001	螺钉M3×4	SCREW M3×4	2	
41	S10024	012061036	螺钉M6×10	SET SCREW SOCKET(FT)M6×10	1	
42	41718001	SA3284101	梭托D	DRIVER D	1	
43	S05123	018501236	螺栓M5×12	BOLT SOCKET M5×12	1	
44	41703020	SA3283101	紧圈R	SET SCREW COLLAR R	1	
45	S09019	012500536	螺钉M5×5	SET SCREW SOCKET(FT)M5×5	1	
46	41718002	152686201	外旋梭B	SHUTTLE RACE BASE B	1	
47	4171801700	S59221201	梭芯套组件LC	BOBBIN CASE ASSY LC	1	
48	41727015	S48664001	夹弹簧AN	TENSION SPRING,AN	1	
49	417S30005	S16492101	螺钉	BOBBIN CASE SPRING SCREW	1	
50	41727016	S15667001	防空转弹簧	ANTI-SPIN SPRING	1	
51	41718004	S44633001	梭芯LAN	BOBBIN LAN	1	
52	41718018	SA8197101	中旋梭组件SA8196	SHUTTLE HOOK ASSY W/BOXSA8196	1	
54	41711317	SA3278001	轴套	BUSH	1	
55	41711318	SA3276001	垫片	SPACER COLLER	2	
56	41724306		滚针轴承K9×12×11	NEEDLE BEARING K9×12×11	2	
57	41729005		切口卡簧	RETAINING RING	2	

F . 供油润滑装置 / Lubrication

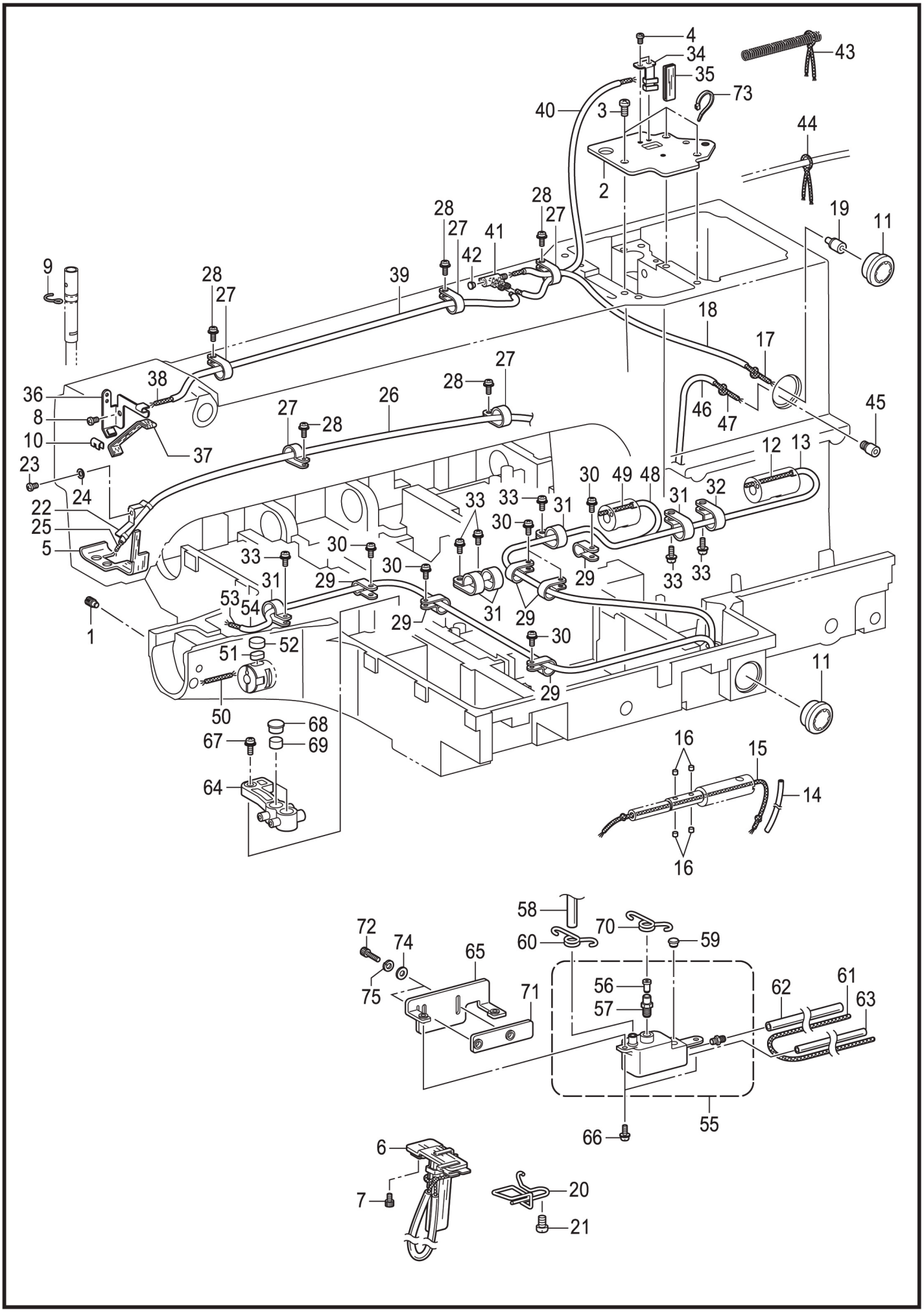

F、供油润滑装置/Lubrication

序号 No.	件号 Part.No.	参考件号 Ref.No.	零部件名称	NAME OF PARTS	数量 Amt.	备注
1	417S30022	SA3244001	螺钉	SET SCREW	1	
2	41712065	SA4785101	曲柄盖	CRANK COVER	1	
3	S04038	062061016	螺钉M6×10	SCREW PAN M6×10	3	
4	S04035	062400616	螺钉M4×6	SCREW PAN M4×6	2	
5	41723005	SA4786101	油毡	FELT	1	
6	41712071	SA3246001	齿轮供油支架	GEAR WICK SUPPORT	1	
6	41723006	SA3504201	下轴齿轮油毡	LOWER SHAFT GEAR FELT	1	
6	41712067	SA3503201	下轴给油支架	LOWER SHAFT WICK SUPPORT	1	
6	12921005	S53175000	油管φ4×φ6	OIL TUBE φ4×φ6	1	
6	12923018	SA5292101	油线4×4	WICK 4×4	1	
6	41723031	SA3280001	油毡	GEAR FELT	1	
7	S05115	018400636	螺栓M4×6	BOLT SOCKET M4×6	2	
8	S04035	062400616	螺钉M4×6	SCREW PAN M4×6	1	
9	41712069	SA6087001	油线挂钩	WICK SUPPORT	1	
10	41712070	104567101	油线支架	WICK SUPPORT	1	
11	41711004	152948001	油视窗	OIL GAUGE WINDOW	1	
11	41722031		橡胶圈	RUBBER RING	1	
11	41711022		挡片	BAFFLE PLATE	1	
12	12923019	SA8783001	油线6×6	WICK 6×6	1	
13	12921005	SA8784001	油管φ4×φ6	OIL TUBE	1	
14	12921002	SA5072001	油管φ3×φ5 L=120	OIL TUBE L=120	1	
15	12923019	SA6578001	油线6×6 L=300	WICK 6×6 L=300	1	
16	41723011	S09043000	滤油毡（L=5）	FELT	4	
17	12923018	S49982000	油线4×4 L=400	WICK 4×4 L=400	1	
18	12921002	S48189000	油管φ3×φ5 L=280	OIL TUBE L=280	1	
19	41736002	SA5339101	油嘴管	OIL FEEDING PIPE	1	
20	41712072	SA4789101	油线夹B	LOWER SHAFT WICK SUPPORT B	1	
21	S04033	062060816	螺钉M6×8	SCREW PAN M6×8	1	
22	41712073	145547001	回油管管托	TUBE HOLDER	1	
23	S04035	062400616	螺栓M4×6	SCREW PAN M4×6	1	
25	12923018	SA8717001	油线4×4	WICK 4×4	1	
26	12921005	SA8718001	油管φ4×φ6	OIL TUBE	1	
27	41711015	525567000	电线夹13.2	CORD HOLDER 13.2	3	
27	41711014	149547000	电线夹6.4	CORD HOLDER 6.4	2	
28	417S30025	0A5401006	螺栓(带垫圈)M4×10DB	SCREW PAN(S/P WASHER)M4×10	5	
29	41711014	149547000	电线夹6.4	CORD HOLDER 6.4	6	
30	417S30025	0A5401006	螺栓(带垫圈)M4×10DB	SCREW PAN(S/P WASHER)M4×10	6	
31	41711017	552907000	电线夹16	CORD HOLDER 16	5	
32	41711017	554482000	电线夹16	CORD HOLDER 16	1	
33	417S30025	0A5401006	螺栓(带垫圈)M4×10DB	SCREW PAN(S/P WASHER)M4×10	6	
34	41712066	SA4787001	曲柄供油板	CRANK WICK PLATE	1	
35	41723027	SA5294001	毡油线L=90	FLAT WICK L=90	1	
36	41712068	SA4788001	供油支架	WICK SUPPORT	1	
37	41723027	SA6593001	毡油线L=180	FLAT WICK L=180	1	
38	41723009	SA8720001	油线3×3	WICK 3×3	1	
39	12921002	SA8721001	油管φ3×φ5	OIL TUBE	1	
40	12921002	SA6576001	油管φ3×φ5 L=210	OIL TUBE L=210	1	
41	41736001	S38265000	管接头L	TERMINAL L	1	
42	41722016	142274101	橡皮塞4.2	RUBBER CAP,4.2	1	
45	41736301	SA8722001	油嘴管	OIL FEEDING PIPE	1	
46	12921006	SA8723001	油管φ6×φ8	OIL TUBE	1	
47	12923019	SA8724001	油线6×6	WICK 6×6	1	
48	12921005	SA8725001	油管φ4×φ6	OIL TUBE	1	
49	12923019	SA8726001	油线6×6	WICK 6×6	1	

F . 供油润滑装置 / Lubrication

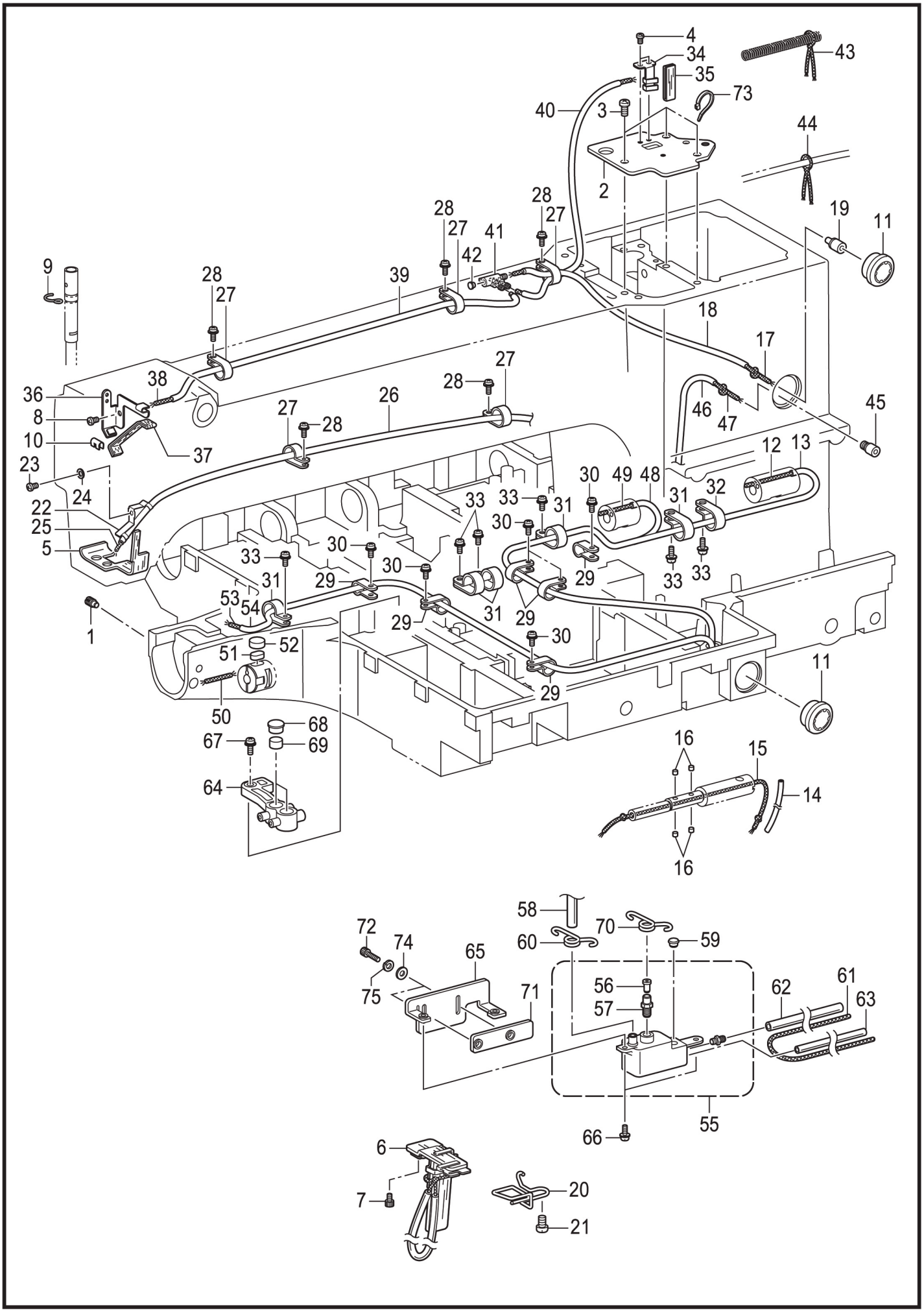

F、供油润滑装置/Lubrication

50	12923019	SA8727001	油线6×6	WICK 6×6	1	
51	41723303	SA8728001	油毡	FELT	1	
52	41723304	SA8729001	油毡	FELT	1	
53	12923019	SA8708001	油线6×6	WICK 6×6	1	
54	12921005	SA8785001	油管φ4×φ6	OIL TUBE	1	
55	12911005	SA8732001	副油罐组件	SUB-TANK ASSY	1	
56	12922010	SA3060001	油门垫片	VALVE PACKING	1	
57	12936004	SA3040001	油嘴管	OIL FEEDING PIPE	1	
58	12921006	SA8733001	油管φ6×φ8	OIL TUBE	1	
59	12922006	104450101	橡皮塞8	RUBBER CAP,8	1	
60	12912038	SA3055101	油管夹	TUBE CLIP	1	
61	20123021	SA8734001	油毡	FELT	1	
62	12921003	SA8735001	油管φ5×φ8	OIL TUBE	1	
63	12921003	SA8786001	油管φ5×φ8	OIL TUBE	1	
64	12936002	SA3946001	油管接头	OIL TERMINAL	1	
65	41712340	SA8736001	油板	OIL PLATE	1	
66	417S30025	0A5401006	螺栓(带垫圈)M4×10DB	SCREW PAN(S/P WASHER)M4×10	2	
67	417S30025	0A5401006	螺栓(带垫圈)M4×10DB	SCREW PAN(S/P WASHER)M4×10	1	
68	12922001	SA2929001	橡皮塞12.5	RUBBER CAP 12.5	2	
69	12923010	S38266000	油毡	ROTARY HOOK SHAFT FELT	2	
70	12912038	SA3055101	油管夹	TUBE CLIP	1	
71	41712013	SA4650001	Y-传感板	Y-SENSOR PLATE	1	
72	S05119	018402036	螺栓M4×20	BOLT SOCKET M4×20	2	
74	W01001	025040236	平垫圈M4	WASHER PLAIN M4	2	
75	W02008	028040246	弹簧垫圈2-4	WASHER SPRING 2-4	2	
76	41736303	SA3040001	油管嘴B	OIL FEEDING PIPE B	2	

G . 穿线装置 / Threading mechanism

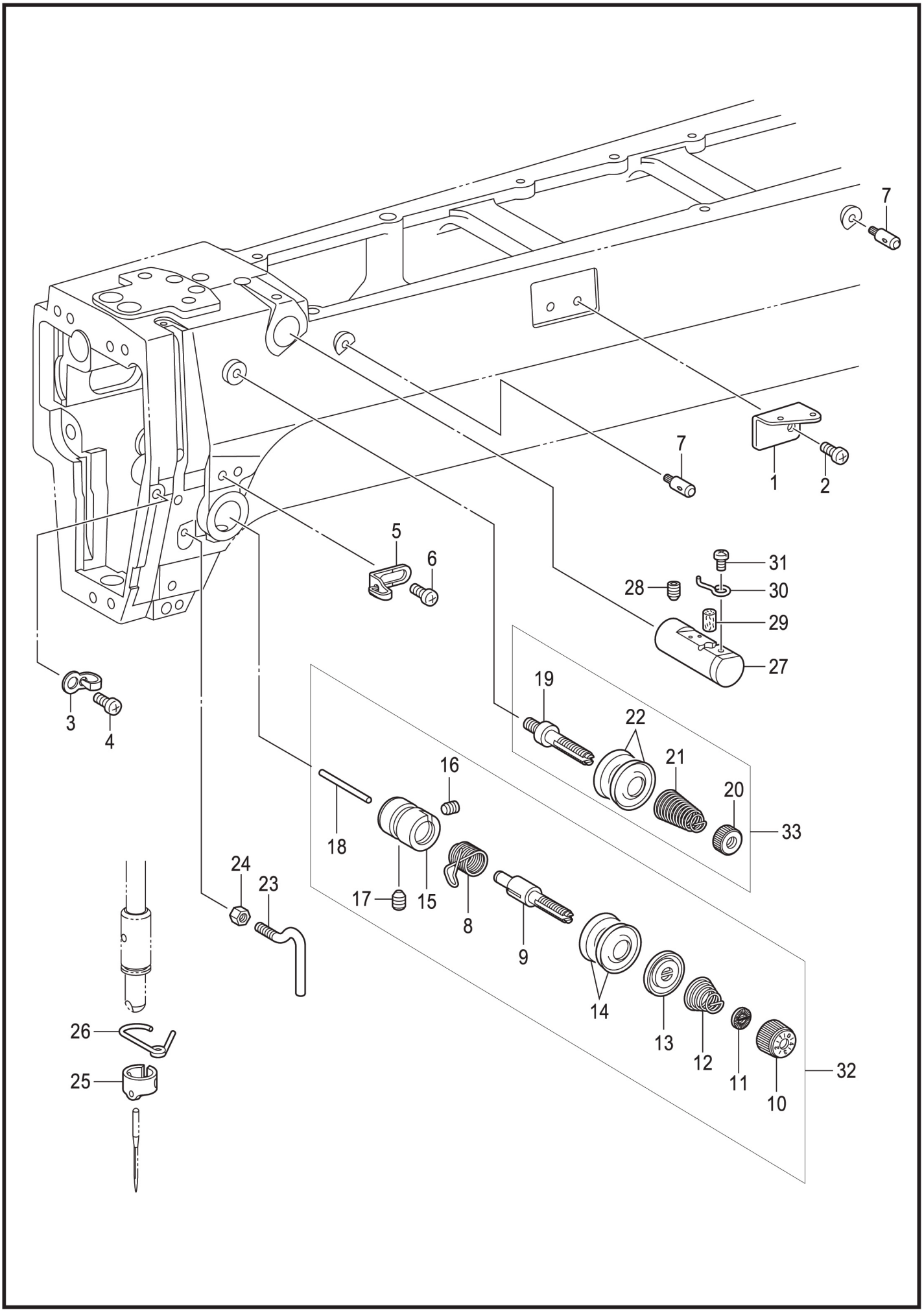

G、穿线装置/Threading mechanism

序号 No.	件号 Part.No.	参考件号 Ref.No.	零部件名称	NAME OF PARTS	数量 Amt.	备注
1	41712077	SA3250001	过线导向A	ARM THREAD GUIDE A	1	
2	S04030	062500616	螺钉M5×6	SCREW PAN M5×6	1	
3	41712078	SA4333001	过线导向B	ARM THREAD GUIDE B	1	
4	S04030	062500616	螺钉M5×6	SCREW PAN M5×6	1	
5	41712079	SA6391001	过线器C	ARM THREAD GUIDE C	1	
6	S04030	062500616	螺钉M5×6	SCREW PAN M5×6	1	
7	41702030	153049001	面线导向杆	UPPER THREAD GUIDE STUD	2	
8	41713002	144588301	挑线弹簧B	THREAD TAKE-UP SPRING B	1	
9	41713003	SA3255001	夹线杆轴	TENSION STUD	1	
10	129S30013	S31032001	压线螺母	TENSION NUT	1	
11	12928014	S12441001	止动垫圈	WASHER	1	
12	41713012	107606001	调节弹簧	TENSION SPRING H	1	
13	41713005	159805001	夹线压盘	TENSION DISC PRESSER	1	
14	41713006	145446001	夹线盘	DISC TENSION	2	
15	41713001	SA3254001	夹线座	TENSION BRACKET	1	
16	417S15012	100402004	固定螺钉SM3.57	SET SCREW SM3.57	1	
17	S10019	SA4143001	螺钉M6×6	SET SCREW (FT) M6×6	1	
18	41702031	S12699000	松线销	TENSION RELEASE PIN	1	
19	41713007	SA3256001	夹线杆轴A	TENSION STUD A	1	
20	41713009	100136001	夹线螺母	TENSION NUT	1	
21	41713010	SA4146101	弹簧	SUB TENSION SPRING	1	
22	41713006	145446001	夹线盘	DISC TENSION	2	
23	41713301	SA8691001	机壳线钩	THREAD GUIDE ARM	1	
24	N01024	021400306	六角螺母M4	NUT 3M 4	1	
25	41726014	SA3257101	针杆线导向 A	NEEDLE BAR THREAD GUIDE A	1	
26	41712082	SA3258001	针杆轴套线导向 D	N-BAR BUSH THREAD GUIDE D	1	
27	41203018	152881001	线冷却器组件	NEEDLE COOLER ASSY	1	
27	41222019		塞头		1	
28	S10019	012060636	螺钉M6×6	SET SCREW SOCKET (FT) M6×6	1	
29	41223043	152883000	油毡8×15.5	FELT 8×15.5	1	
30	41213008	152884001	过线钩	NEEDLE COOLER THEAD GUIDE	1	
31	409S11017	062670412	螺钉SM3.57-40×4	SCREW PAN SM3.57-40×4	1	
32	4171301300		主夹线器组件	THREAD TENSION REGUALATOR ASSY	1	
33	4171301400		副夹线器组件	THREAD TENSION REGUALATOR ASSY	1	

H . 卷线装置 / Bobbin winder mechanism

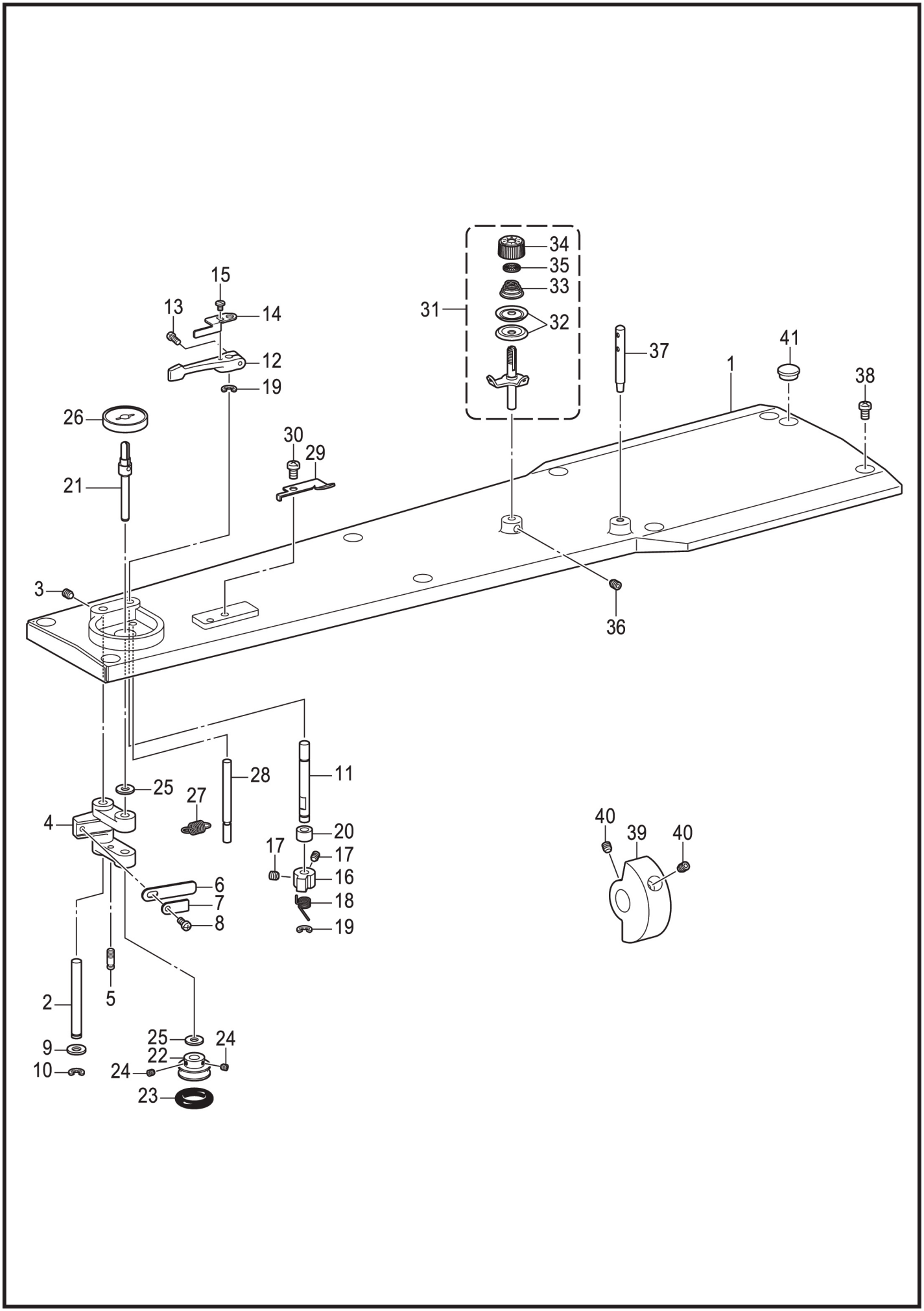

H、卷线装置/Bobbin winder mechanism

序号 No.	件号 Part.No.	参考件号 Ref.No.	零部件名称	NAME OF PARTS	数量 Amt.	备注
1	301491	SA8650001	上盖	TOP COVER	1	
2	41702033	SA3290001	卷线手柄轴	SHAFT BW-LEVER	1	
3	S09019	012500536	螺钉M5×5	SET SCREW SOCKET(FT)M5×5	1	
4	41709026	SA3291001	卷线手柄	BOBBIN WINDER LEVER	1	
5	41702034	SA4171001	弹簧挂钩	SPRING HOOK	1	
6	41712084	152936001	板弹簧	PLATE SPRING	1	
7	41712085	152937001	垫圈	WASHER	1	
8	S04077	062350616	螺钉M3.5×6	SCREW PAN M3.5×6	1	
9	W01015	159486001	垫圈	WASHER	1	
10	H05006	048050342	挡圈E5	RETAINING RING E5	1	
11	41702035	SA3293001	卷线卡爪轴	STUD B-WINDER	1	
12	41709027	SA1984001	梭芯压臂柄	BOBBINPRESSER ARM	1	
13	S04081	062401216	螺钉M4×12	SCREW PAN 4×12	1	
14	41712086	SA3294001	梭芯压杆	BOBBIN PRESSER	1	
15	417S15006	S23418002	螺钉M4×5	SCREW M4×5	1	
16	41709028	SA3295001	卷线卡爪	CLAW B-WINDER	1	
17	S09006	012400436	螺钉M4×4	SET SCREW SOCKET(FT)M4×4	2	
18	41727007	S10438001	弹簧	SPRING TWIST	1	
19	H05006	048050342	挡圈E5	RETAINING RING E5	2	
20	41708025	SA4796001	垫管	SPACER COLLER	1	
21	41702036	SA3296001	卷线轴	BOBBIN WINDER SHAFT	1	
22	41703021	SA3297001	卷线器	WHEEL B-WINDER	1	
23	41722017	120448001	橡皮圈	BOBBIN WINDER RUBBER BAND	1	
24	S09006	012400436	螺钉M4×4	SET SCREW SOCKET(FT)M4×4	2	
25	W01015	159486001	垫圈	WASHER	2	
26	41711063	SA1988001	梭芯座	BOBBIN SUPPORT	1	
27	41727008	S10268001	拉簧	SPRING	1	
28	41702037	SA3298001	止动轴	STPPER SHAFT B-WINDER	1	
29	41719001	SA3299001	切刀	KNIFT	1	
30	S04030	062500616	螺钉M5×6	SCREW PAN M5×6	1	
31	1291301100	SA1994101	卷线器夹线组件	BOBBIN WINDER TENSION ASSY	1	
32	12913007	145446002	夹线盘	DRIVING WHEEL B-WINDER	2	
33	12927016	100401022	夹线弹簧	TENSION SPRING	1	
34	129S30013	S31032001	压线螺母	TENSION NUT	1	
35	12928014	S12441001	止动垫圈	WASHER	1	
36	S09019	012500536	螺钉M5×5	SET SCREW SOCKET(FT)M5×5	1	
37	41713302	SA1359001	穿线杆	SPOOL PIN	1	
38	S04038	062061016	螺钉M6×10	SCREW PAN M6×10	6	
39	41704002	SA4797101	卷线驱动轮	DRIVING WHEEL B-WINDER	1	
40	S10018	S23651001	固定螺钉M6×0.75-6	SET SCREW SOCKET(FT)M6×6	2	
41	41722002	117934001	橡皮塞13.5	RUBBER CAP,13.5	1	

J . 切线装置 / Thread trimmer mechanism

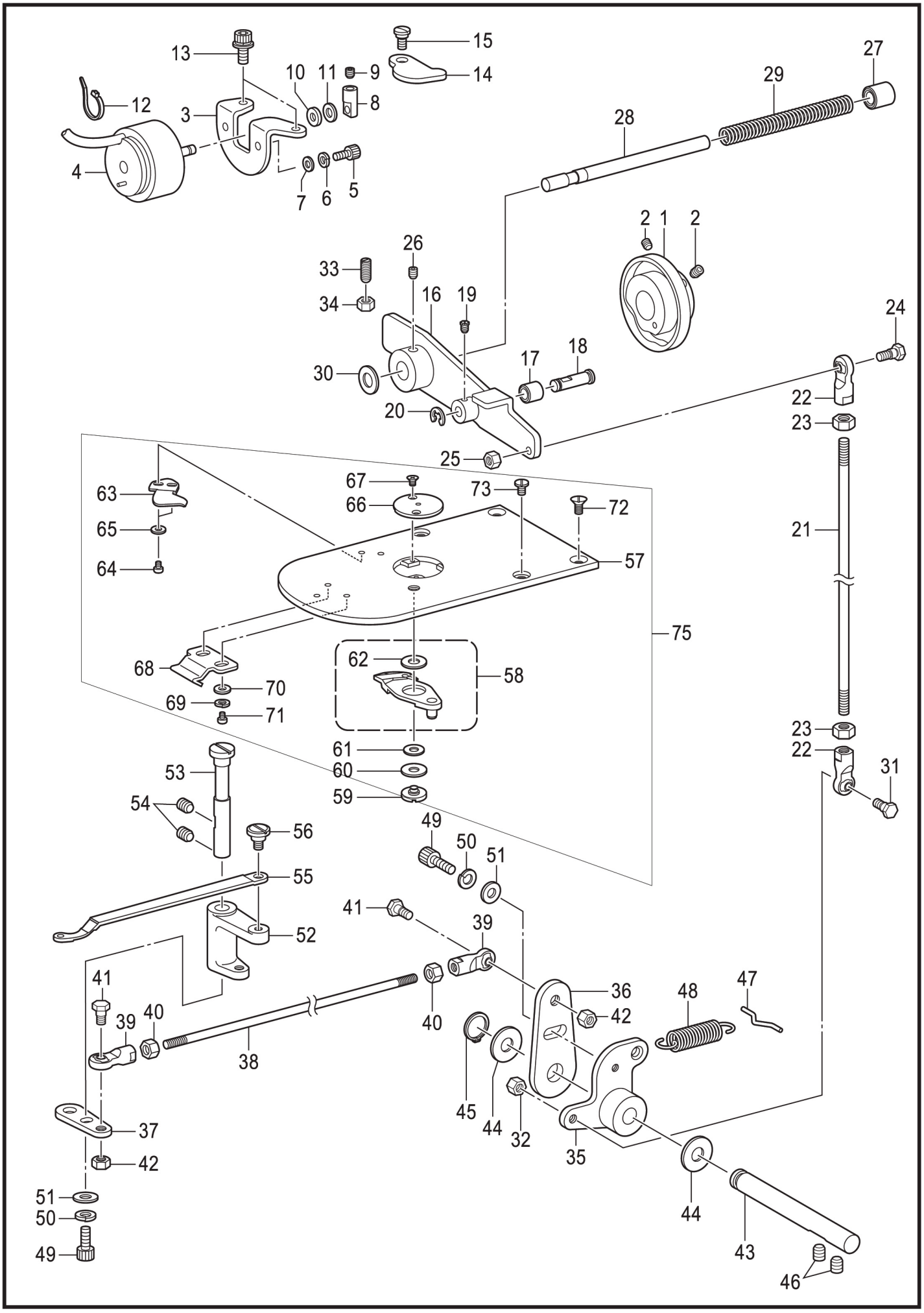

J、切线装置/Thread trimmer mechanism

序号 No.	件号 Part.No.	参考件号 Ref.No.	零部件名称	NAME OF PARTS	数量 Amt.	备注
1	41710003	SA3301101	切线凸轮	THREAD TRIMMER CAM	1	
2	S10018	S23651001	固定螺钉M6×0.75-6	SET SCREW SOCKET(FT)M6×6	2	
3	41712087	SA4798001	电磁铁安装板	SETTING PLATE SOLENOID	1	
4	41730001	SA5135101	切线电磁铁	THREAD TRIMMER SOLENOID	1	
5	L02031	017400802	螺栓M4×8	BOLT M4×8	2	
6	W02008	028040246	弹簧垫圈2-4	WASHER SPRING 2-4	2	
7	W01001	025040236	平垫圈M4	WASHER PLAIN M4	2	
8	41702038	SA3307001	电磁铁杆	SOLENOID LEVER	1	
9	S09006	012400436	螺钉M4×4	SET SCREW SOCKET(FT)M4×4	1	
10	41722020	154599000	电磁铁缓冲垫圈	SOLENOID CUSHION	1	
11	41728033	S02445001	垫圈	WASHEWR	1	
13	417S30035	S55484002	螺栓(带垫圈) M5×10	BOLT SCREW SOCKET(SP/WASHER)M5×10	2	
14	41712088	SA4799001	驱动压杆	PUSHING LEVER D-LEVER	1	
15	417S30012	SA3306001	段螺钉7-3	SHOULDER SCREW 7-3	1	
16	4171211100	SA3309101	切线驱动杆组件	TR-DRIVING LEVER	1	
17	41703022	SA3310001	切线滚轮	COLLAR TR-TRIMMER	1	
18	41702039	SA3311001	切线滚轮轴	COLLAR SHAFT	1	
19	417S12009	S46903001	螺钉M4×5	SET SCREW M4×5	1	
20	H05029	048040342	挡圈E4	RETAINING RING E4	1	
21	41702040	SA3315001	切线杆V	THREAD TRIMMER RODV	1	
22	4170500300	S32465101	接头组件	BALL JOINT ASSY	2	
23	N01021	021060106	螺母M6	NUT 1 M6	2	
24	417S12005	S32462001	段螺钉BM6	SHOULDER SCREW B M6	1	
25	N01012	021060306	六角螺母M6	NUT 3 M6	1	
26	S10018	S23651001	固定螺钉M6×0.75-6	SET SCREW SOCKET(FT)M6×6	1	
27	41703023	231071001	轴套8×15	BUSH 8×15	1	
28	41702041	SA3312201	驱动杆导向轴	GUIDE SHAFT	1	
29	41727009	SA3313101	弹簧	SPRING COMPRESSION	1	
30	41722018	154596000	减震垫圈	CUSHION	1	
31	417S12005	S32462001	段螺钉BM6	SHOULDER SCREW B M6	1	
32	N01012	021060306	六角螺母M6	NUT 3 M6	1	
33	417S10003	S25475101	螺钉M6×19	SET SCREW M6×19	1	
34	N01021	021060106	螺母M6	NUT 1 M6	1	
35	41712089	SA4546001	切线杠杆V	THREAD TRIMMER LEVER V	1	
36	41712090	SA3317001	切线杠杆H	THREAD TRIMMER LEVER H	1	
37	41712341	SA8652001	切线杠杆D	MOVING KNIFE LEVER	1	
38	41705306	SA8654001	切线杆H	THREAD TRIMMER ROD H	1	
39	4170500300	S32465101	接头组件	BALL JOINT ASSY	2	
40	N01021	021060106	螺母 M6	NUT 1 M6	2	
41	417S12005	S32462001	段螺钉BM6	SHOULDER SCREW B M6	2	
42	N01012	021060306	六角螺母M6	NUT 3 M6	2	
43	41702042	SA3319101	切线杠杆轴	SHAFT TR-TRIMMER LEVER	1	
44	41728023	SA4545001	垫片	SPACER	2	
45	H03006	048080142	轴用挡圈C8	RETAINING RING EXTERNAL C8	1	
46	S10019	012060636	螺钉M6×6	SET SCREW SOCKET(FT)M6×6	2	
47	41712342	SA8655001	弹簧挂钩	SPRING HOOK	1	
48	41727010	SA3321001	切线复位弹簧	SPRING EXTENSION	1	
49	S05123	018501236	螺栓M5×12	BOLT SOCKET M5×12	2	
50	W02001	028050246	弹簧垫圈2-5	WASHER SPRING 2-5	2	
51	41728028	146354002	垫圈5	WASHER PLAIN 5	2	
52	400680	SA8656001	动刀杆	MOVING KNIFE LEVER	1	
53	41702311	SA8657001	动刀杆轴	SHAFT MOVABLE KNIFE LEVER	1	
54	S10019	012060636	螺钉M6×6	SET SCREW SOCKET(FT)M6×6	2	
55	41712343	SA8658101	动刀连杆	M-KNIFE CONNECTING PLATE	1	
56	417S30013	SA4354001	段螺钉6-1.8	SHOULDER SCREW 6-1.8	1	
57	41715001	SA5157101	针板A	NEEDLE PLATE A	1	
58	4170903000	SA6596001	动刀复合件F	MOVABLE KNIFE ASSY F	1	

J . 切线装置 / Thread trimmer mechanism

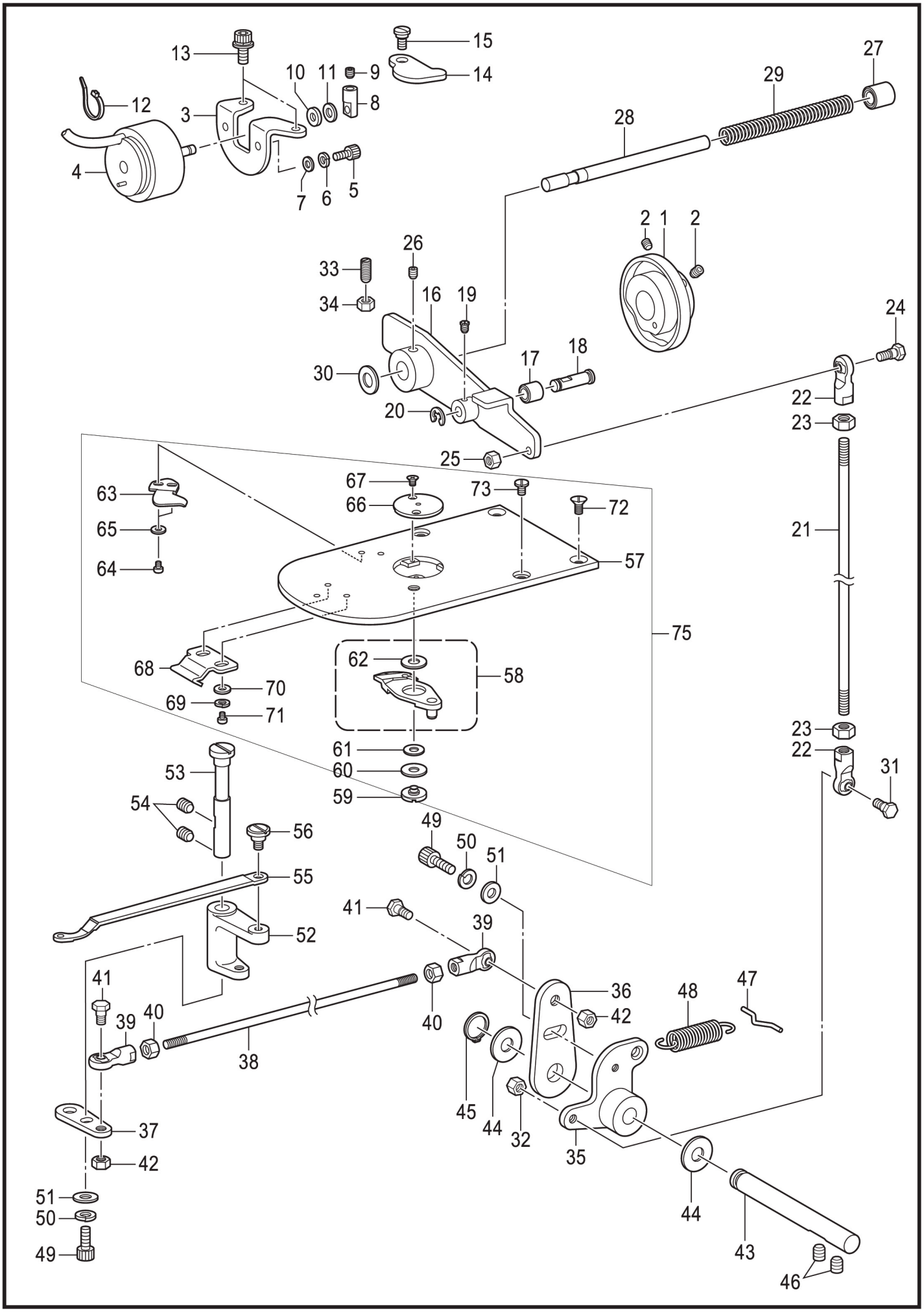

J、切线装置/Thread trimmer mechanism

序号 No.	件号 Part.No.	参考件号 Ref.No.	零部件名称	NAME OF PARTS	数量 Amt.	备注
59	417S30014	SA4518001	段螺钉	MOVABLE KNIFE SHOULDER SCREW	1	
60	41728007	SA4519001	动刀圈套	THRUST WASHER	1	
61	41728008	S00705001	动刀圈套	MOVABLE KNIFE COLLAR	1	
62	41728009	SA6397001	垫片0.2	M-KNIFE SPACER T0.2	1	
62	41728009	SA3334001	垫片0.3	M-KNIFE SPACER T0.3	1	
62	41728009	SA6398001	垫片0.4	M-KNIFE SPACER T0.4	1	
63	41719002	SA7944001	固定刀FL	FIXED KNIFE FL	1	
64	S04036	062300416	螺钉M3×4	SCREW PAN M3×4	2	
65	W01002	025030236	垫圈M3	WASHER PLAIN M3	2	
66	41712094	SA3336101	针孔板2.4C0.4	NEEDLE HOLE PLATE 2.4C0.4	1	
67	417S17001	100360003	螺钉SM2.38	SCREW	2	
68	41712095	SA6273101	大旋梭盖挂钩U	SHUTTLE BASE COVER HOOK U	1	
69	W02007	028030246	弹簧垫圈2-3	WASHER SPRING 2-3	2	
70	W01002	025030236	垫圈M3	WASHER PLAIN M3	2	
71	S04036	062300416	螺钉M3×4	SCREW PAN M3×4	2	
72	S02039	S25310101	螺钉M4	SCREW,FLAT M4	2	
73	417S15008	SA3538001	螺钉M4×8	SCREW, M4×8	2	
75	4171500100	SA5157101	针板A组件	NEEDLE PLATE A ASSY	1	

K . 扫线装置 / Thread wiper mechanism

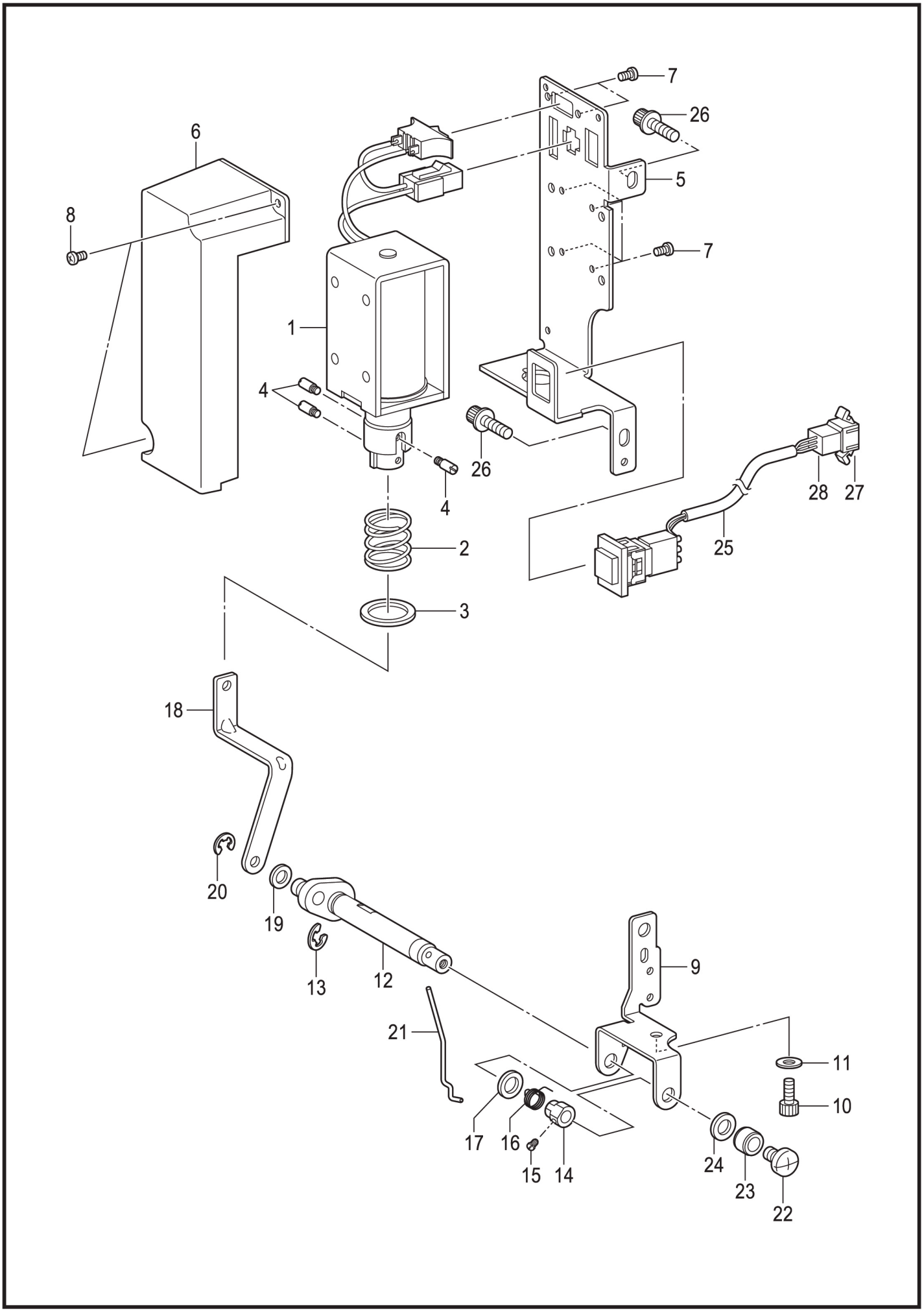

K、扫线装置/Thread wiper mechanism

序号 No.	公司件号 Part No.	参考件号 Ref.No.	零部件名称	NAME OF PARTS	数量 Amt.	备注
1	41730002	SA5208001	扫线电磁铁组件	THREAD WIPER SOLENOID ASSY	1	
2	41727011	S41206001	挡线弹簧	THREAD WIPER SPRING	1	
3	41728011	S41205001	平垫圈	WASHER PLAIN	1	
4	41726007	S25456001	柱塞销	PLUNGER PIN	3	
5	41712210	SA5217001	扫线电磁铁安装板	T-WIPER SOLENOID SETTING PLATE	1	
6	41711011	SA4806001	电磁铁盖	SOLENOID COVER	1	
7	S04082	062300616	螺钉M3×6	SCREW PAN M3×4	6	
8	S04082	062300616	螺钉M3×6	SCREW PAN M3×4	2	
9	41712096	SA5218001	扫线轴托架	THREAD WIPER SHAFT BRACKET	1	
10	S05116	018400836	螺栓M4×8	BOLT SOCKET M4×8	1	
11	W01001	025040236	垫圈4	WASHER PLAN M4	1	
12	4170204400	SA1967001	扫线曲柄组件	THREAD WIPER CRANK ASSY	1	
13	H05029	048040342	挡圈E4	RETAINING RING E4	1	
14	41708007	S25454001	螺纹紧圈	SET SCREW COLLAR	1	
15	417S15005	S25279001	螺钉M3.5-5	SET SCREW (CP)M3.5-5	1	
16	41727012	SA2287001	扭簧	SPRING	1	
18	41712097	SA5219001	扫线杆	THREAD WIPER ROD	1	
19	W01024	110735001	垫圈	WASHER	1	
20	H05002	048030342	挡圈3	RETAINING RING E3	1	
21	41712098	S10470101	扫线钢丝	WIPER	1	
22	417S15013	060400516	螺钉M4×5	SCREW BIND M4×5	1	
23	41708008	146288001	挡线轴挡圈	THREAD WIPER STUD COLLAR	1	
24	41728034	S03677001	垫圈	WASHER	1	
25	41730003	SA5213001	停止开关组件	STOP SWITCH ASSY	1	
26	417S30306	S55485001	螺栓(带垫圈)M5×15	BOLT SOCKET(S/P WASHER) M5×12	2	
27	41730059		插件A	PLUGIN A	1	
28	41730060		插件B	PLUGIN B	1	

L . 松线装置 / Tension release mechanism

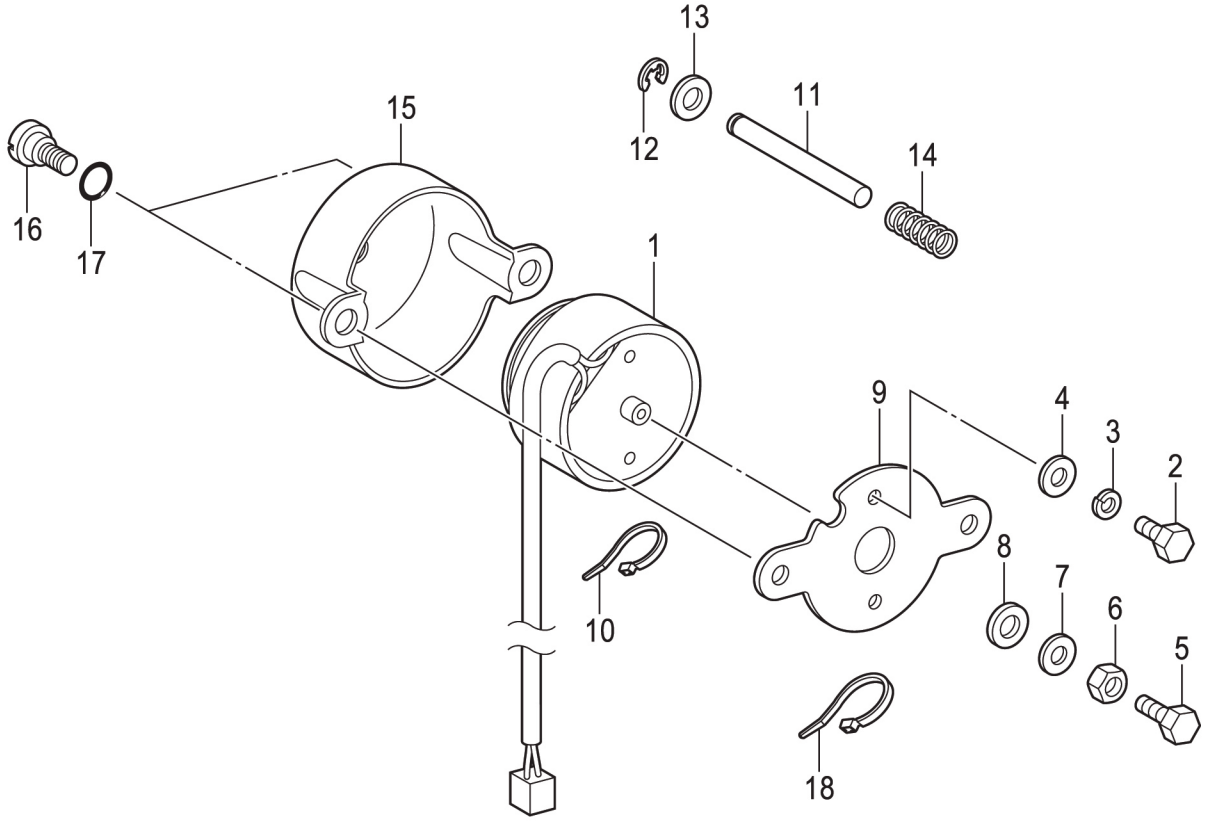

L、松线装置/Tension release mechanism

序号 No.	公司件号 Part No.	参考件号 Ref.No.	零部件名称	NAME OF PARTS	数量 Amt.	备注
1	41730004	SA4855001	松线电磁铁HV	TENSION RELEASE SOLENOID HV	1	
2	L02031	017400802	螺栓M4×8	BOLT M4×8	2	
3	W02008	028040246	弹簧垫圈2-4	WASHER SPRING 2-4	2	
4	W01001	025040236	垫圈4	WASHER PLAIN M4	2	
5	L02071	017401415	螺栓M4×14	BOLT M4×14	1	
6	N01024	021400306	六角螺母M4	NUT 3 M4	1	
7	W01001	025040236	平垫圈M4	WASHER PLANT M4	1	
8	41722020	154599000	电磁铁缓冲垫圈	SOLENOID CUSHION	1	
9	41712099	SA6389001	电磁铁安装板	SETTING PLATE SOLENOID	1	
11	41702045	SA3347001	松线杆	TENSION RELEASE BAR	1	
12	H05029	048040342	挡圈E4	RETAINING RING E4	1	
13	W01009	025050236	垫圈5	WASHER PLAIN M5	1	
14	41727013	SA3348001	弹簧	SPRING COMPRESSION	1	
15	41711013	SA3349001	电磁铁盖	SOLENOID COVER	1	
16	417S30012	SA3306001	段螺钉7-3	SHOULDE SCREW 7-3	2	
17	41722021	081007070	O形圈P7	O RING P7	2	

P . 空压装置 / Air pressure mechanism

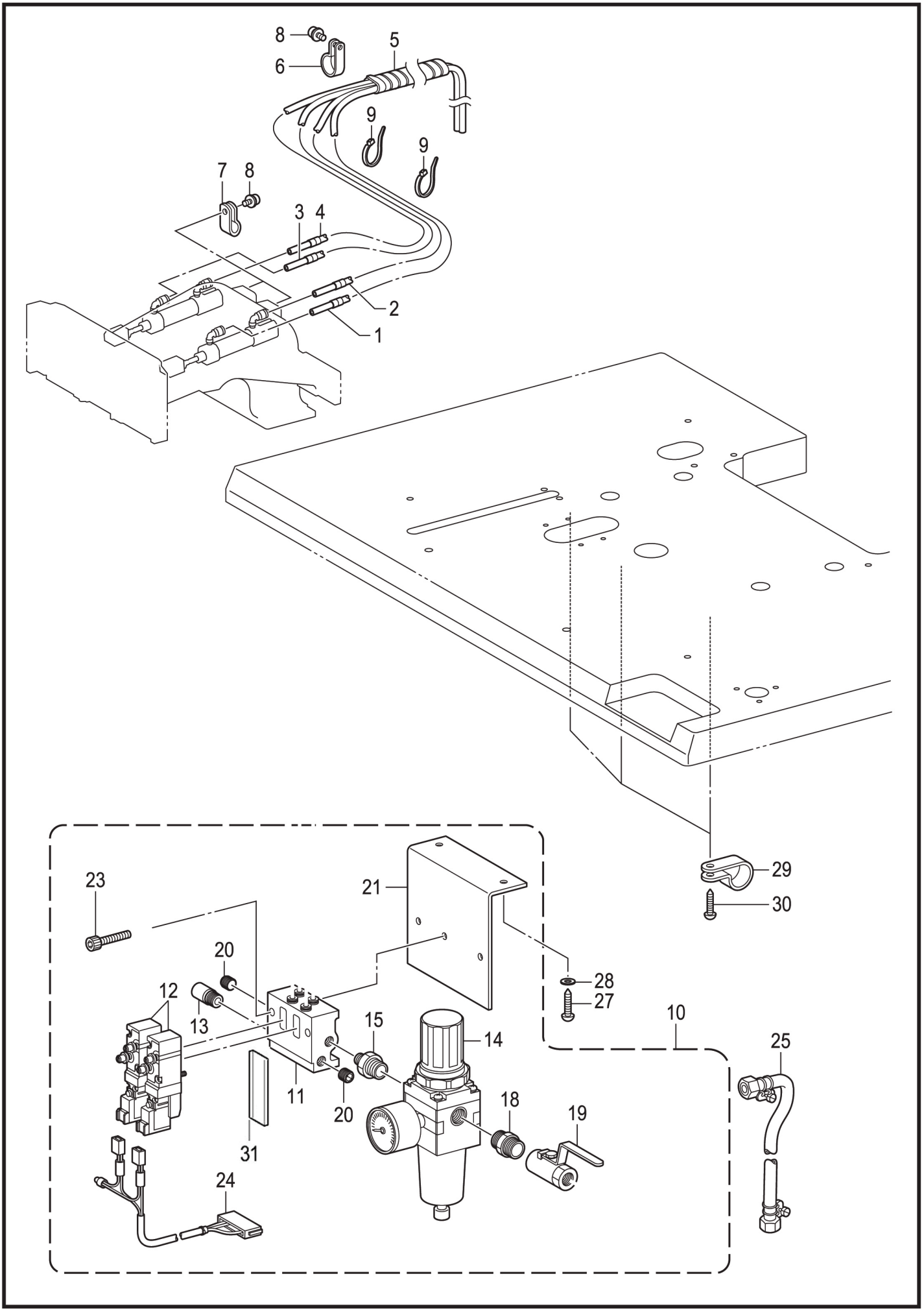

P、空压装置/Air pressure mechanism

序号 No.	公司件号 Part No.	参考件号 Ref.No.	零部件名称	NAME OF PARTS	数量 Amt.	备注
1	61911006	SA8659001	空气管R	AIR TUBE R	2.5	
2	61911006	SA8659002	空气管R	AIR TUBE R	2.5	
3	61911006	SA8660001	空气管L	AIR TUBE L	2.5	
4	61911006	SA8660002	空气管L	AIR TUBE L	2.5	
5	41711010	SA8661001	螺旋管线650S	SPIRAL 650S	2	
6	41711015	525664000	电线夹13.2	CORD HOLDER 13.2	1	
7	41711014	149547000	电线夹6.4	CORD HOLDER 6.4	2	
8	417S30025	0A5401005	螺栓(带垫圈)M4×10DB	SCREW PAN (S/P WASHER)M4×10	3	
11	41730077	SA5289001	汇流板KV110-4E-3F	MANIFOLD3	1	
12	41730076	S39116100	电磁阀KV110-4E	SOLENOID VALVE KV110-4E	2	
13	40728003	SA5283001	消声器	SILENCER	2	
14	40730024	SA5282001	气压阀	AIR VALVE	1	
15	417S30026	S09228000	管接头	NIPPLE	1	
19	42130096	SA6573001	手动开关VHK3	VALVE VHK3	1	
20	407S12002	153274001	汇流板密封螺钉	SCREW	3	
21	41712106	SA5286101	阀安装板	SETTING PLATE VALVE	1	
23	417S30024	018503036	螺栓M5×30	BOLT SOCKET M5×30	2	
23	N01024	021400306	螺母M4	NUT 3 M4	2	
24	41730022	SA5191001	阀门接线2连组	VALVE HARNESS×2 ASSY	1	
24	61807021		接插件SY100-30-A	CONNECTOR	2	
25	40730010		螺旋气管	SPIRAL TUBE	6	
25	40736001		螺纹管套接头	THREADED BUSHING FITTINGS	1	
27	417S30015	032422003	木螺钉	WOOD SCREW	2	
31	41730078	S53982000	电磁阀盖板	SOLENOID VALVE COVER	1	

Q . 电气部品装置 / Power supply equipment mechanism

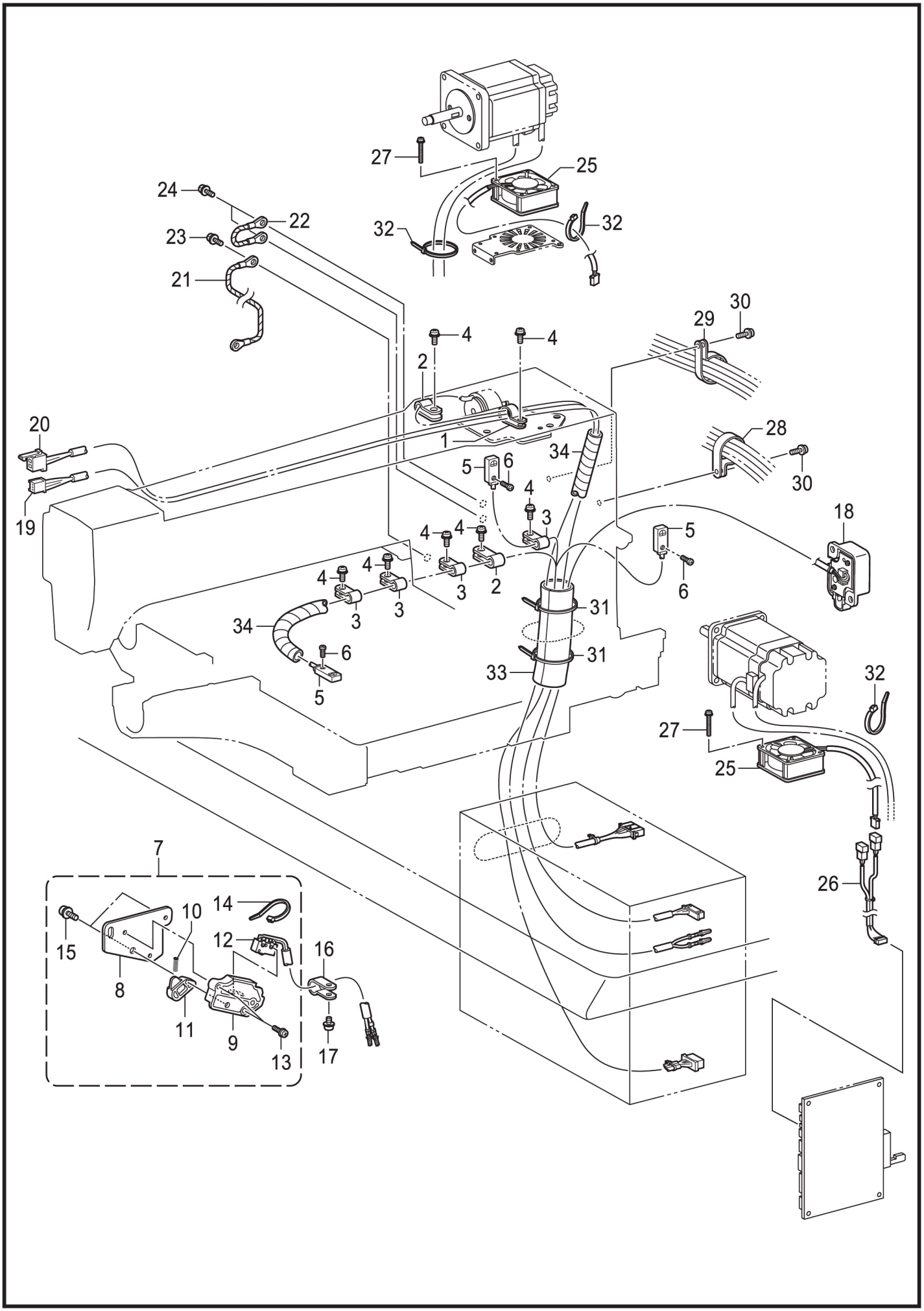

Q、电器部品装置/Power supply equipment mechanism

序号 No.	件号 Part.No.	参考件号 Ref.No.	零部件名称	NAME OF PARTS	数量 Amt.	备注
1	41711017	525567000	电线夹16	CORD HOLDER 16	1	
2	41711014	149547000	压线板6.4	CORD HOLDER 6.4	1	
3	41711014	625010000	压线板6.4	CORD HOLDER 6.4	5	
4	417S30025	0A5401006	螺栓(带垫圈)M4×10DB	SCREW PAN(S/P WASHER)M4×10	7	
5	41730851	SA8521001	原点感应器组件T3020	H-POSITION SENSOR 3020 ASSY	1	
6	S04076	062300816	螺钉M3×8	SCREW PAN M3×8	3	
7	4173030800	SA8521001	安全开关板组件 T3020	SAFETY SWITCH PLATE ASSY 342G	1	
8	41712344	SA8523001	安全开关板T3020	SAFETY SWITCH PLATE 3020	1	
9	41711314	SA5730101	开关基座	SAFETY SWITCH BASE	1	
10	41727302	SA5731001	开关弹簧	SAFETY SWITCH SPRING	1	
11	41711315	SA5732101	开关手柄	SAFETY SWITCH LEVER	1	
12	41730309	SA8524001	安全开关组件	SAFETY SWITCH ASSY	1	
13	417S30308	SA7293001	螺栓(带垫圈)M3×12	SCREW PAN(S/P WASHER)M3×12	2	
15	417S30025	0A5401006	螺栓(带垫圈)M4×10DB	SCREW PAN(S/P WASHER)M4×10	2	
16	41711014	149547000	压线板6.4	CORD HOLDER 6.4	1	
17	417S30025	0A5401006	螺栓(带垫圈)M4×10DB	SCREW PAN(S/P WASHER)M4×10	1	
19	41730030	SA8527001	停止开关接线T3020	STOP SWITCH HARNESS 3020	1	
20	41730312	SA8528001	扫线电磁铁接线	WIPER SOLENOID HARNESS 3020	1	
21	41730313	SA3486001	地线350	GROUND WIRE 350	1	
22	41730314	SA5433001	接地线	GROUND WIRE	1	
23	417S30025	0A5401006	螺栓(带垫圈)M4×10DB	SCREW PAN(S/P WASHER)M4×10	1	
24	417S30025	0A5401006	螺栓(带垫圈)M4×10DB	SCREW PAN(S/P WASHER)M4×10	2	
25	41730315	SA8532001	DC风扇组件	DC-FAN MOTOR ASSY	2	
26	41730316	SA8533001	DC风扇接线	DC-FAN HARNESS	1	
27	417S30309	0A5403006	螺栓(带垫圈)M4×30DB	SCREW PAN(S/P WASHER)M4×30	8	
28	41711026	554482000	电线夹23	CORD HOLDER 23	1	
29	41711026	554482000	电线夹23	CORD HOLDER 23	1	
30	417S30025	0A5401006	螺栓(带垫圈)M4×10DB	SCREW PAN(S/P WASHER)M4×10	2	
33	41711319	SA8881001	粘连管	QUICK TUBE	1	
34	41711009	SA6366001	螺旋管140S	SPIRAL TUBE	1	

S . 马达装置 / Motor mechanism

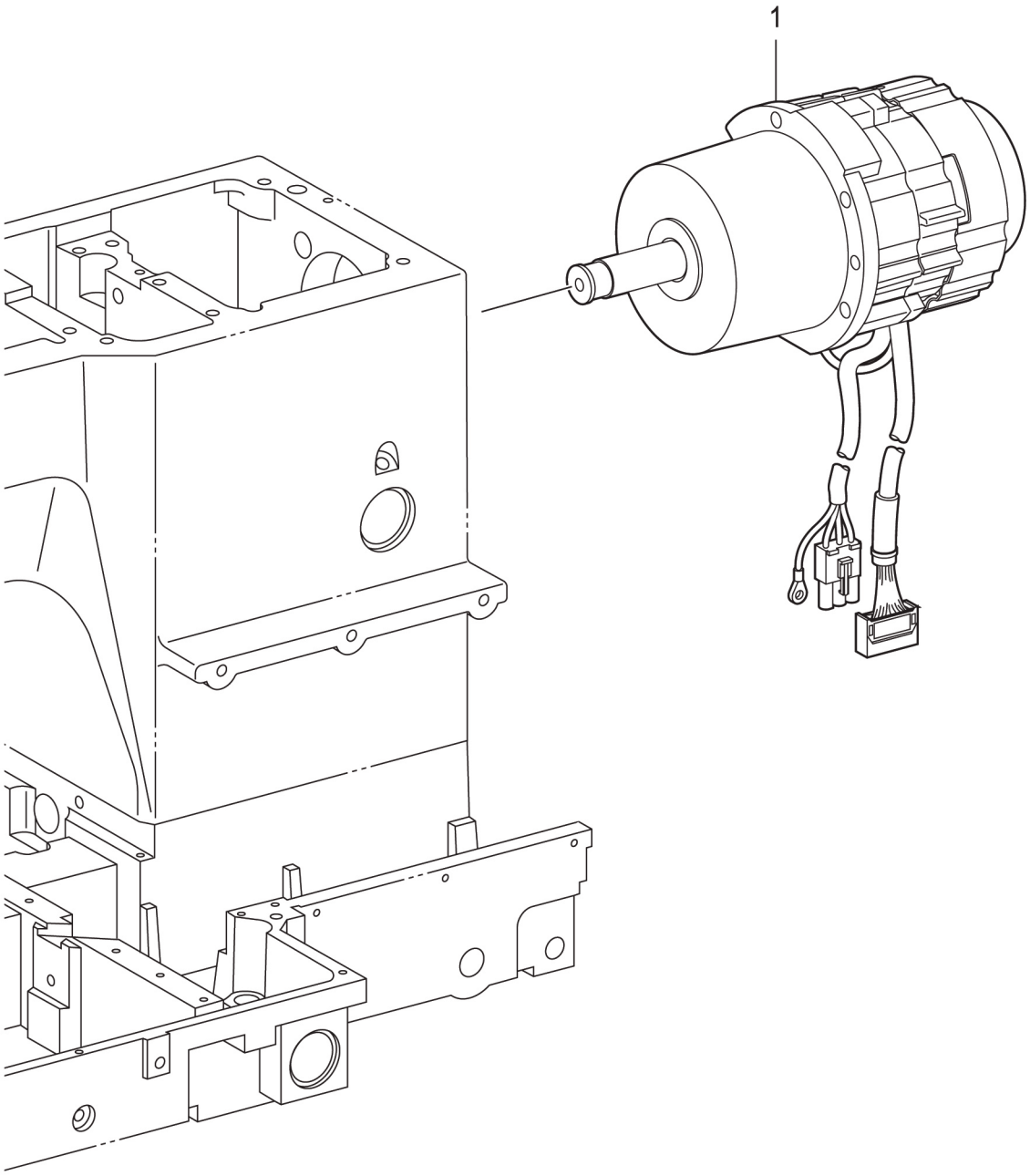

S、马达装置/Motor mechanism

序号 No.	公司件号 Part No.	参考件号 Ref.No.	零部件名称	NAME OF PARTS	数量 Amt.	备注
1	41730047	J80991001	马达组件CDD-430D	MOTOR ASSY CDD-430D	1	
2	41730320		3020电控箱	2210 ELECTRICAL CONTROL BOX	1	
3	40931008		电机座垫	RUBBER SPACER	4	
4	S05088		螺栓M6×45	BOLT SOCKET M6×45	4	
5	41730070		LED灯(TD-5)	LED LIGHT (TD-5)	1	
6	41732180		机架台板组件	RACK PALLET COMPONENTS	1	
7	41532020		脚轮	CASTERS	4	
11	41712108		开关安装支架	SWITCH MOUNTING BRACKET	1	
12	S05048	018401036	螺钉M4×10	BOLT SOCKET M4×10	2	
13	N01024	021400306	六角螺母M4	NUT 3 M4	2	

T . 踏板开关关系 / Foot switch pedal mechanism

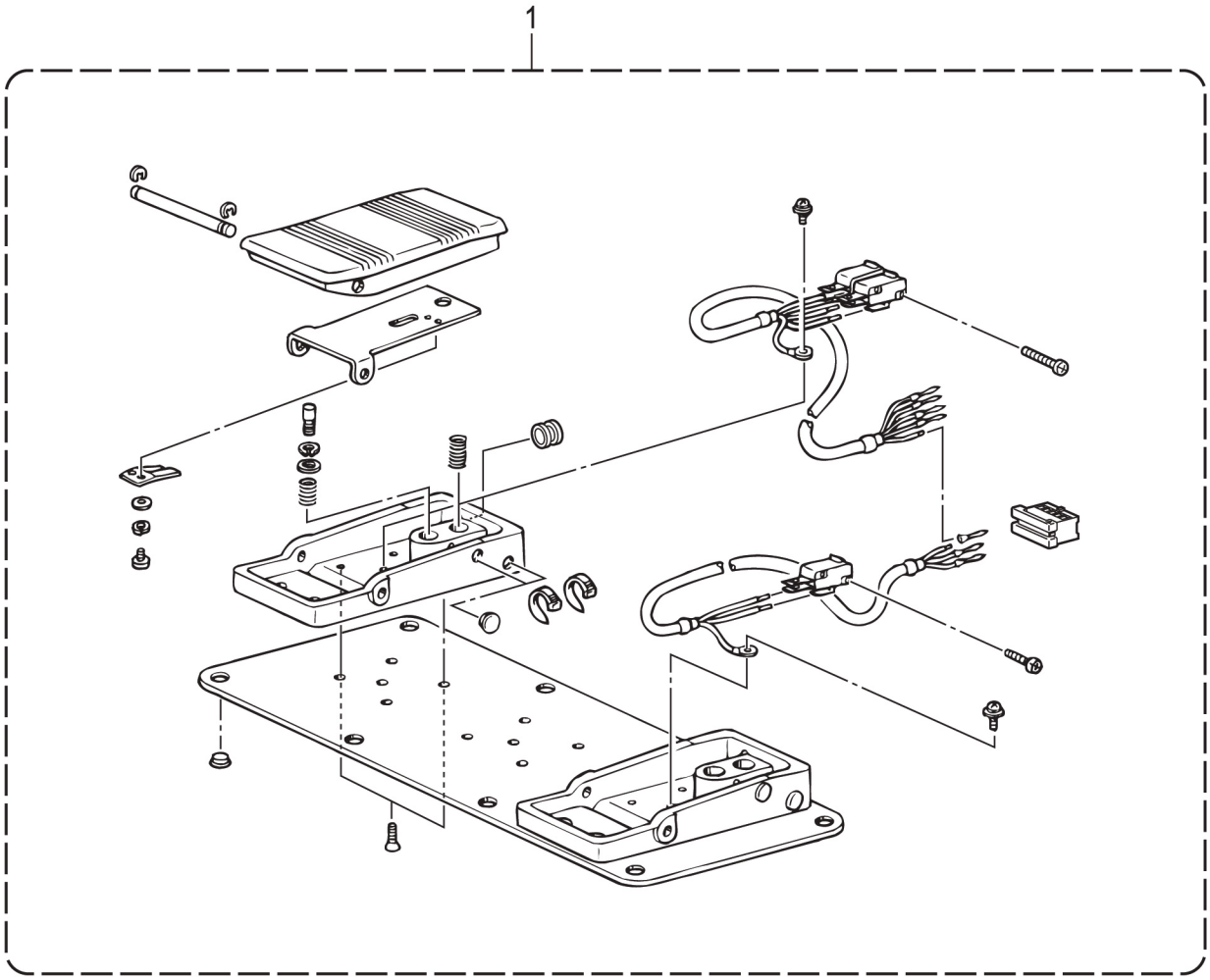

T、踏板开关关系/Foot switch pedal mechanism

序号 No.	公司件号 Part No.	参考件号 Ref.No.	零部件名称	NAME OF PARTS	数量 Amt.	备注
1	41730045	SA6038001	2连脚踏开关组件	2-PEDAL FOOT SWITCH SW ASSY	1	
2	41727018	S38168001	弹簧	SPRING COMPRESSION 10×30	1	
3	41727019	S38170001	弹簧	FOOT PEDAL SPRING	2	
4	41730046	S36260000	开关 VX	PIN BUTTON MICRO SWITCH VX	3	
5	41712115	S38174000	脚踏板	FOOT PEDAL	2	
6	41712116	S38175001	脚踏护板	PROTECTION PLATE PEDAL	2	
7	41712117	S38176101	弹簧板	SPRING PLATE	2	

3020电控箱组件-DH-V5(ELECTRIC CABINET COMPONENTS)

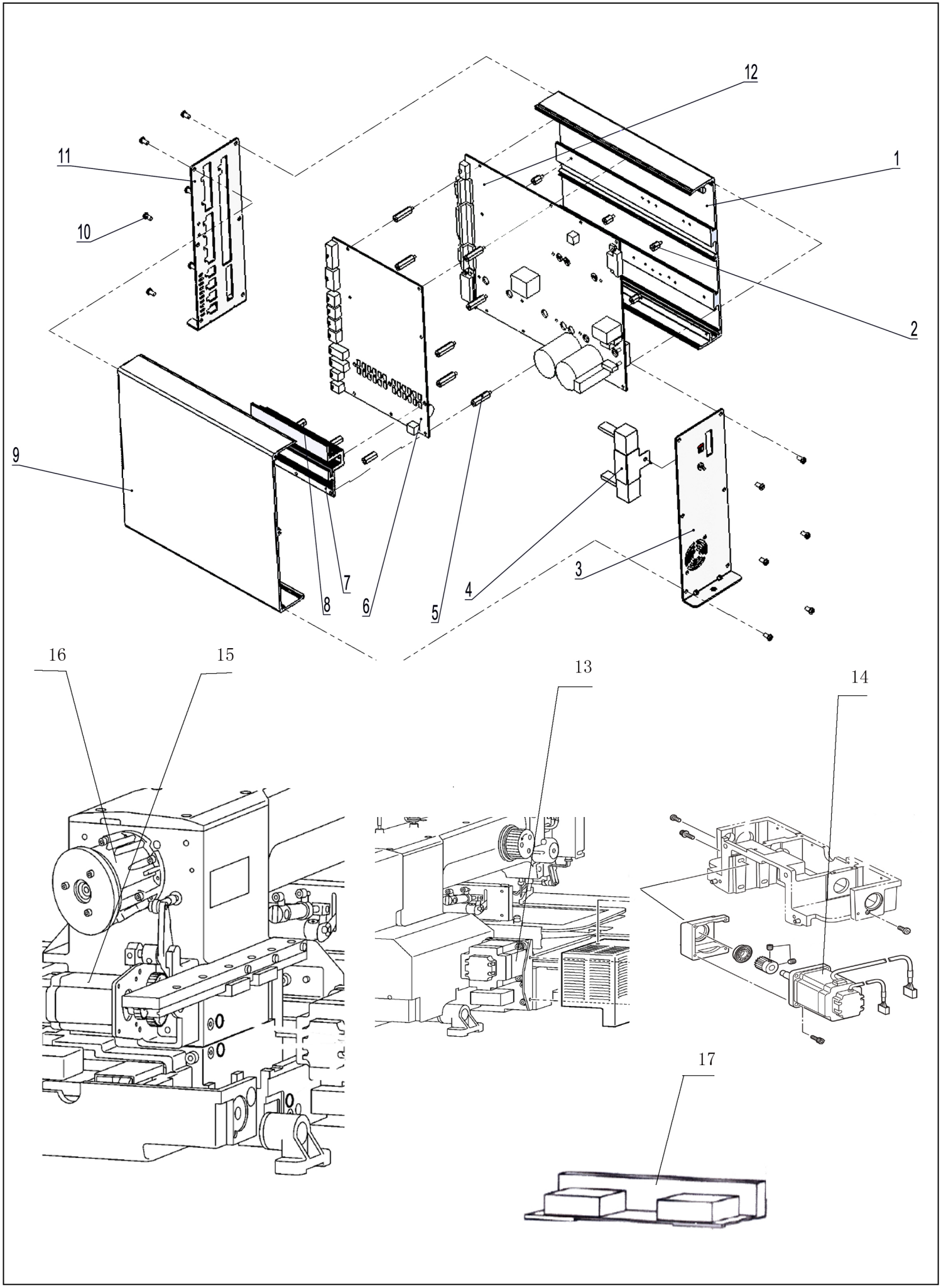

3020电控箱-DH-V5/3020 ELECTRIC CONTROL PANEL

序号 No.	公司件号 Part.No.	零部件名称	NAME OF PARTS	数量Amt.	备注
1	41730557	基板-DH-V5	SUBSTRATE	1	
2	41726100	螺柱1	STUD		
3	41730558	前板-DH-V5	THE FRONT PLATE	1	
4	41730559	电阻-DH-V5	RESISTANCE	1	
5	41726101	螺柱2	STUD		
6	41730567	电路板1-DH-V5	CIRCUIT BOARD 1	1	
7	41730560	异形散热器-DH-V5	RADIATOR	1	
8	41726102	螺柱3	STUD		
9	41730561	电控箱盖-DH-V5	COVER	1	
10	417S04001	螺钉1	SCREW		
11	41730562	后板-DH-V5	THE REAR PANEL	1	
12	41730568	电路板2-DH-V5	CIRCUIT BOARD 2	1	
13	41730563	X向电机3020-DH-V5	MOTOR(X)	1	
14	41730564	Y向电机3020-DH-V5	MOTOR(Y)	1	
15	41730565	Z向电机-DH-V5	MOTOR(Z)	1	
16	41730555	主轴电机-DH-V5	SOINDLE MOTOR	1	
17	41730556	脚踏板-DH-V5	PEDAL	1	

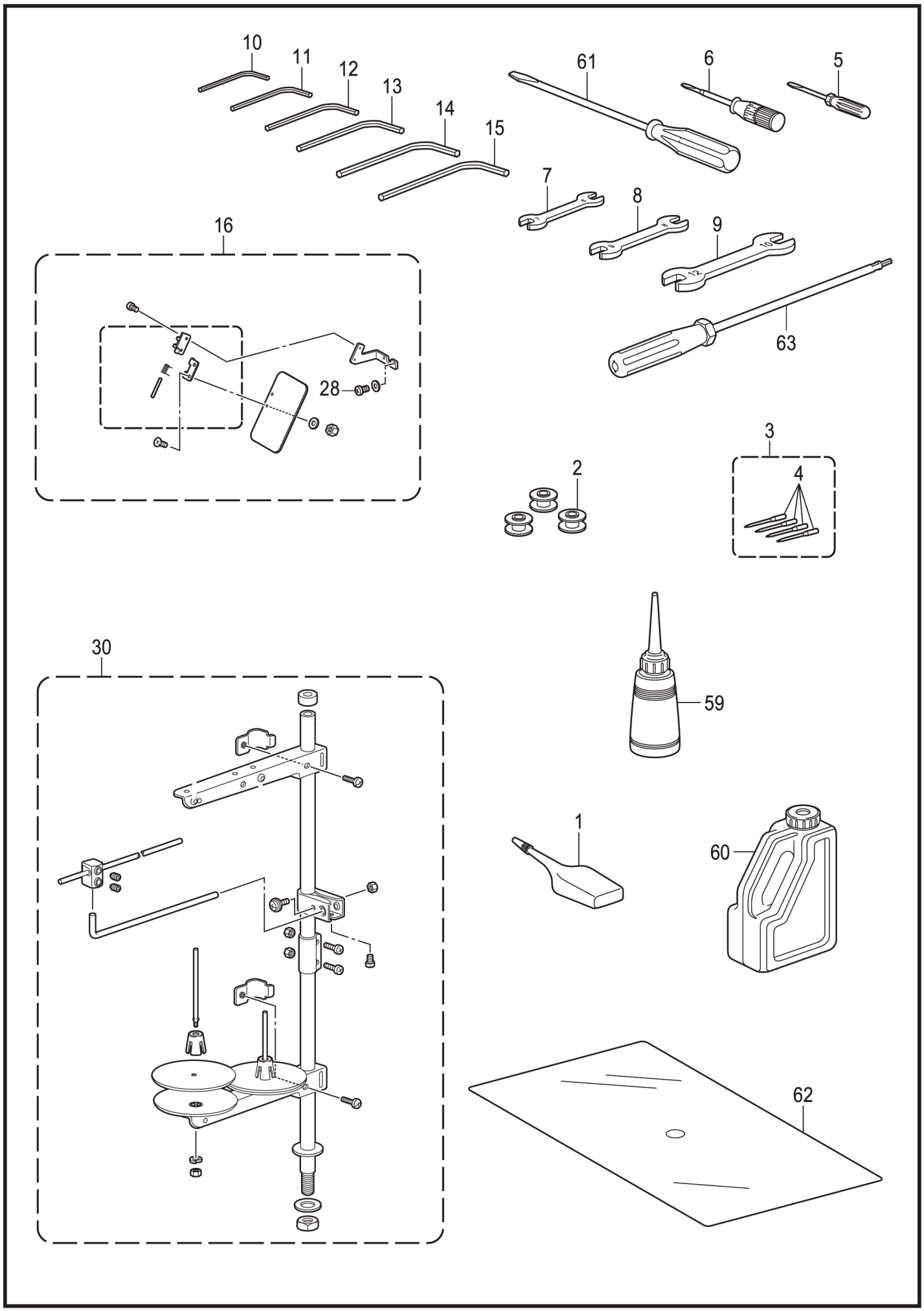
10
11
12
13
14
15
61
6
5
7
8
9
16
63
28
3
2
4
30
59
1
60
62

Z、附件/Accessories

序号 No.	件号 Part.No.	参考件号 Ref.No.	零部件名称	NAME OF PARTS	数量 Amt.	备注
1	20131038	S06706001	硅油	SILICONE OIL	1	
2	41718004	S44633001	梭心LAN	BOBBIN LAN	3	
4	40319006	145646019	机针DP×17<#19>	NEEDLE DP×17	4	
5	10131004	142443001	螺丝刀(小)	SCREW-DRIVER (SMALL)	1	
6	10131003	118837001	螺丝刀(中)	SCREW-DRIVER (MIDDLE)	1	
7	30131005	107779001	双头扳手6×7	WRENCH 6×7	1	
8	30131006	100887001	双手扳手8×10	WRENCH 8×10	1	
10	30131007	S07783001	内六角扳手1.5	HEXAGONAL WRENCH 1.5	1	
11	20131046	142002001	内六角扳手2	HEXAGONAL WRENCH 2	1	
12	30331010	154125001	内六角扳手2.5	HEXAGONAL WRENCH 2.5	1	
13	30131012	142721001	内六角扳手3	HEXAGONAL WRENCH 3	1	
14	20131047	118064001	内六角扳手4	HEXAGONAL WRENCH 4	1	
15	20131056	150335001	内六角扳手5	HEXAGONAL WRENCH 5	1	
16	4121208400	SA4103001	护眼板组件D	EYE GUARD SET D	1	
28	417S30025	0A5401005	螺栓(带垫圈)M4×10DB	SCREW PAN (S/P WASHER)M4×10	2	
30	1013100700	S40574309	线架组件2DTHF	COTTON STAND ASSY 2DTHF	1	
59	11631008	114483002	油壶组件	OILER ASSY	1	
60	20131037	S55663001	油罐组件	OIL TANK ASSY	1	
61	10131002	101572102	螺丝刀(中)	SCREW-DRIVER (MIDDLE)	1	
71	20131051		镊子	FORCEPS	1	
72	41712355		针板专用螺丝刀	NEEDLE PLATE SPECIAL SCREWDRIVER	1	
73	11411029		注射器(润滑脂)	INJECTOR (GREASE)	1	
74	41731001		说明书	MANUAL	1	

W4 . 附属装置(选购件) / Attachment set (Option parts)

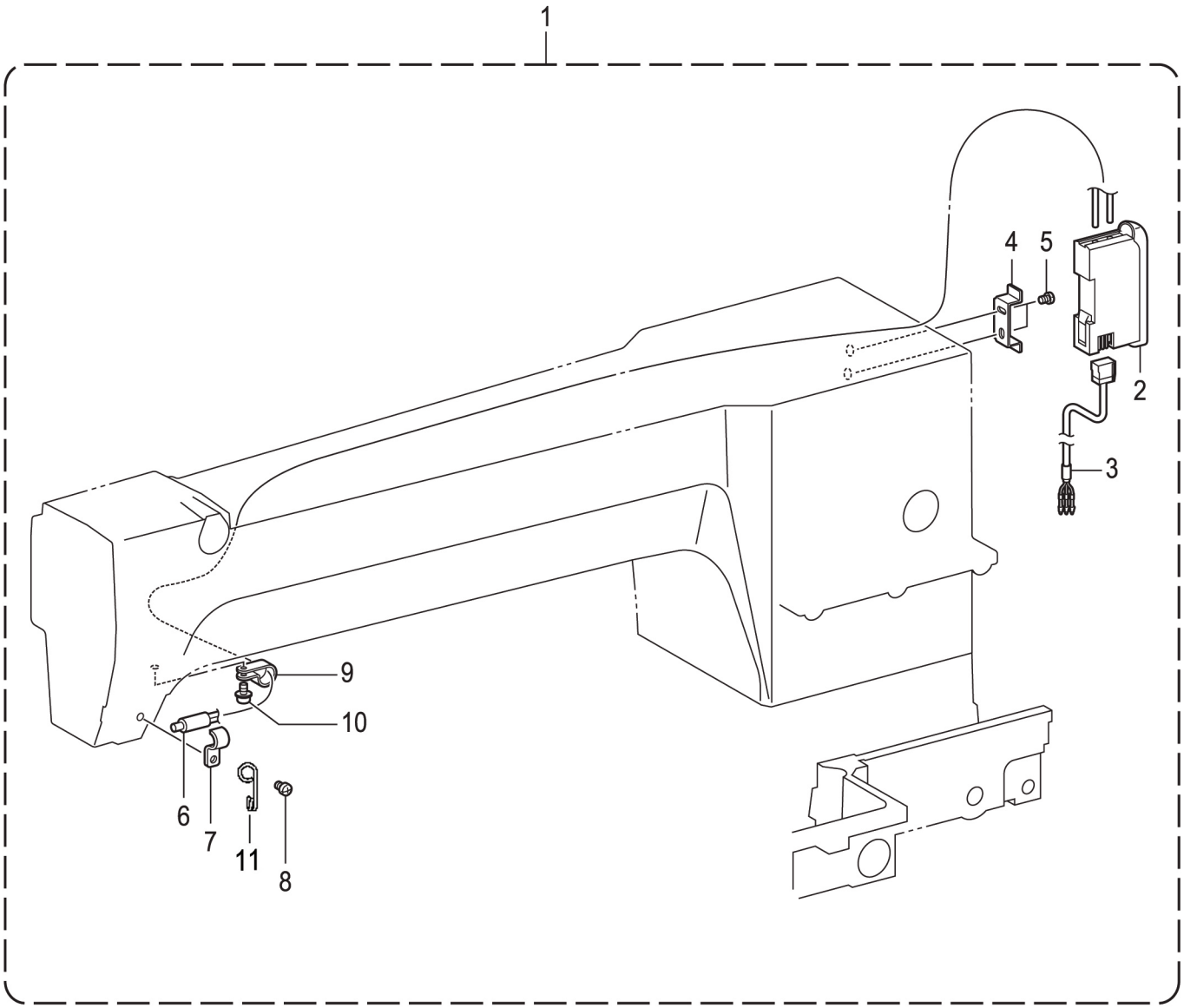

W4、附属装置(选购件)/Attachment set(Option parts)

序号 No.	公司件号 Part No.	参考件号 Ref.No.	零部件名称	NAME OF PARTS	数量 Amt.	备注
2	41730074	SA4816001	信号放大器FZ1-N	FIBER AMP FZ1-N	1	
5	S05127	62300616	螺钉M3×6	SCREW PAN M3×6	2	
6	41730073	SA4819001	光导纤维传感器PRD-	FIBER PRD-410	1	
7	41712115	SA5194001	传感器固定板	SENSOR SETTING PLATE	1	
8	417S13301	SA8597001	螺栓M5×12	BOLT SOCKETM5×12	1	
9	41711014	149547000	尼龙夹6.4	CORD HOLDER 6.4	1	
10	417S30025	0A5401006	螺栓(带垫圈)M4×10	SCREW PAN(S/P WASHER)M4×10	1	
11	41712635		过线器DX	ARM THREAD GUIDE DX	1	

W5 . 外压脚装置 / External work clamp mechanism

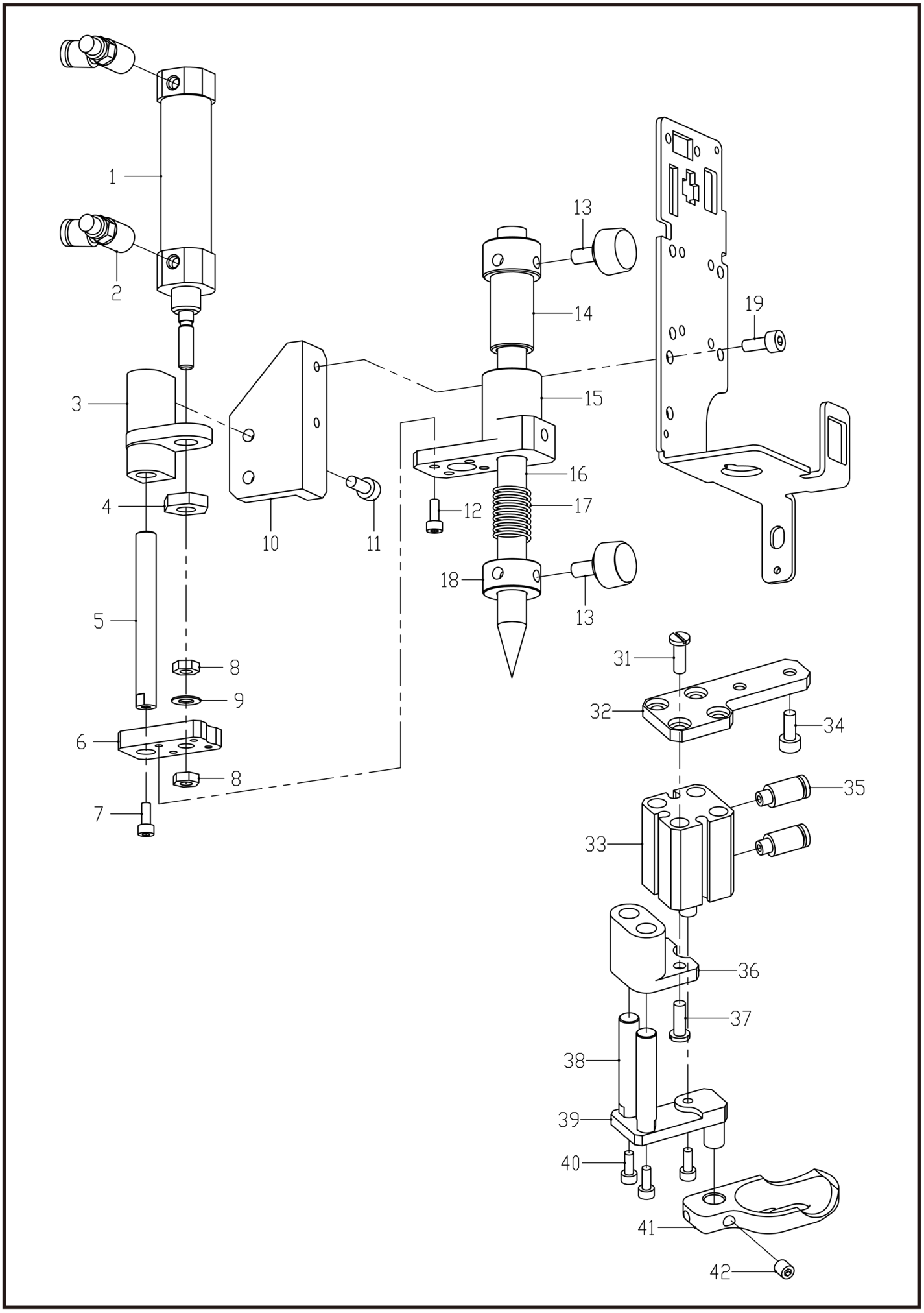

W5、外压脚装置/External work clamp mechanism

序号 No.	件号 Part.No.	参考件号 Ref.No.	零部件名称	NAME OF PARTS	数量 Amt.	备注
1	42230821		气缸CJ2B16-30D	AIR CYLINDER CJ2B16-30D	1	
2	40736004		可调节气管接头（螺纹M5）	ADJUSTABLE PIPE JOINT	2	
3	401738	42201821	导杆座	GUIDE ROT SEAT	1	
5	401740	42202821	导杆C	GUIDE ROT C	1	
6	401737	42209831	驱动板	DRIVE PLATE	1	
7	S05127	62300616	螺钉M3×6	SCREW PAN M3×6	1	
8	N01017	021500216	六角螺母M5	NUT 2 M5	2	
9	41728028	146354002	垫圈5	WASHER PLAIN 5	1	
10	401743	42209837	点笔装置安装板	PEN DEVICE MOUNTING PLATE	1	
11	S05048	018401036	螺栓M4×10	BOLT SOCKET M4×10	2	
12	S05052		螺栓M3×10	BOLT SOCKET M3×10	4	
13	41711005	S36475000	螺钉M5	SCREW M5	2	
14	401735	42211811	导套	GUIDE BUSHING	1	
15	401734	42209817	点笔安放架	PEN RACK	1	
16	42231815		点笔	PEN	1	
17	40527015		弹簧	SPRING	1	
18	401739	42208821	紧圈	SET SCREW COLLAR	1	
19	S05048	018401036	螺栓M4×10	BOLT SOCKET M4×10	2	
31	417S15003	S23849001	螺钉M4×12	SCREW M4×12	4	
32	401614		气缸固定板A	AIR CYLINDER FIXING PLATE A	1	
33	42230822		气缸CQ2B12-15D	AIR CYLINDER CQ2B12-15D	1	
34	S05048	018401036	螺栓M4×10	BOLT SOCKET M4×10	2	
35	40736048		直通气管接头M5	STRAIGHT PIPE JOINT M5	2	
36	401742	42201822	导杆架	GUIDE ROT FRAME	1	
37	S05010	018401236	螺栓M4×12	BOLT SOCKET M4×12	2	
38	42226508	401741	导杆D	GUIDE ROT D	2	
39	401733	42209816	联接块	CONNECTING BLOCK	1	
40	S05127	62300616	螺钉M3×6	SCREW PAN M3×6	1	
41	401615	42216811	大压脚A	WORK CLAMP A	1	
42	S09019	012500536	螺钉M5×5	SET SCREW SOCKET（FT）M5×5	2	
43	12912327		电线固定夹	WIRE CLIP	1	
44	417S30025	0A5401006	螺栓（带垫圈）M4×10DB	SCREW PAN（S/P WASHER）M4×10	1	

Ga . 工模具一览表 / Gauge parts list

压脚 / **Presser foot**			
A / S42843-001 *	B / S42844-001	C / S42845-001	D / S42846-001
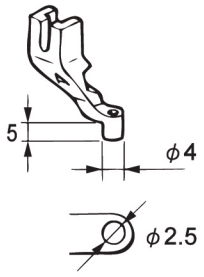	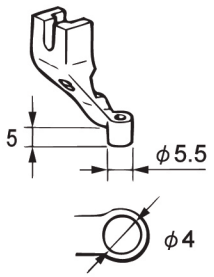	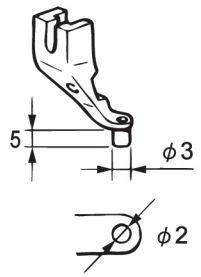	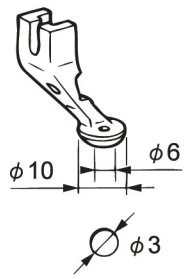
E / S42847-001	F / 157237-001	G / 158592-001	J / S42848-001
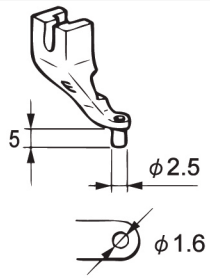		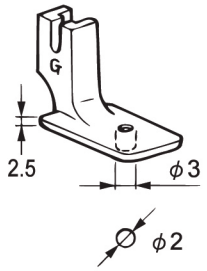	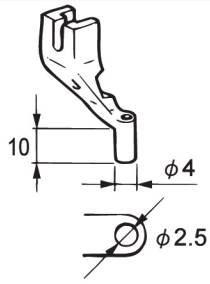
A-CUT / S40214-001	B-L / S49448-001	XA / S42849-101	H / SA4811-001
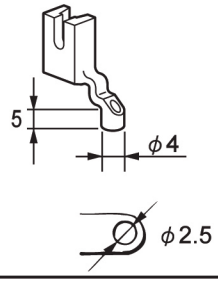	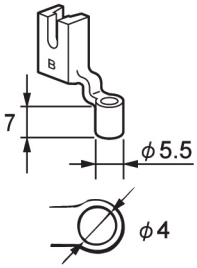	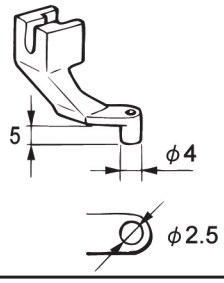	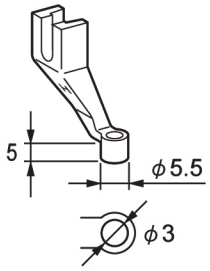

针孔板 / **Needle hole plate**			
2.4 C0.4 / SA3336-101 *	2.2 / SA5221-001	3.0 C1.5 / SA5222-101	1.6 / SA7191-001
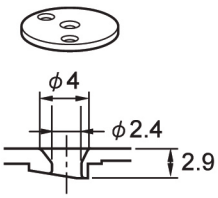	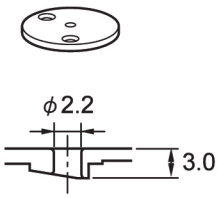	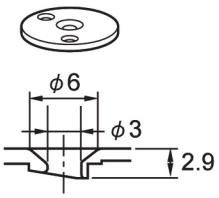	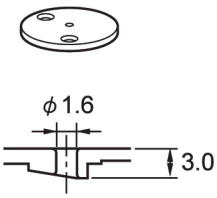

印有 * 记号的为标准零部件

The * symbol is for Standard parts.

Ga、工模具一览表/Gauge parts list

序号 No.	公司件号 Part No.	参考件号Ref.No.	零部件名称	NAME OF PARTS	数量 Amt.	备注
1	41716001	A/S42843001	中压脚A	WORK CLAMP A	1	
2		B/S42844001	中压脚B	WORK CLAMP B	1	
3		C/S42845001	中压脚C	WORK CLAMP C	1	
4	41716004	D/S42846001	中压脚D	WORK CLAMP D	1	
5		E/S42847001	中压脚E	WORK CLAMP E	1	
6	41716021	F/157237001	中压脚F	WORK CLAMP F	1	
7		G/157592001	中压脚G	WORK CLAMP G	1	
8	41716010	J/S42848001	中压脚J	WORK CLAMP J	1	
9		A-CUT/S40214001	中压脚A	WORK CLAMP A-CUT	1	
10		B-L/S49448001	中压脚A	WORK CLAMP B-L	1	
11		XA/S42849101	中压脚A	WORK CLAMP XA	1	
12	41716003	H/SA4811001	中压脚H	WORK CLAMP H	1	
13	41712094	2.4C0.4/SA3336001	针孔板φ2.4	NEEDLE HOLE PLATE φ2.4	1	
14	41715002	2.0/SA5221001	针孔板φ2.0	NEEDLE HOLE PLATE φ2.0	1	
15	41715005	3.0C1.5/SA5222001	针孔板φ3.0	NEEDLE HOLE PLATE φ3.0	1	
16		1.6/SA7191001	针孔板φ1.6	NEEDLE HOLE PLATE φ1.6	2	